STEL
WELDING DIVISION

Italian creations
the only way to forward

GENERAL CATALOGUE
2017-18

PRODOTTO IN ITALIA

INDEX

- **Company Profile** — **page 1-6**
- **STICK (SMAW) Section** — **page 7-10**
  - Sky 156 — page 11-12
  - MAX 142 — page 13-14
  - MAX 161 — page 13-14
  - MAX 182 — page 15-16
  - MAX 191 PFC — page 17-18
  - MAX dp 201C — page 19-20
  - MAX 223C Pipeline — page 21-22
  - MAX 403 — page 23-24
  - MAX 403S — page 25-26
  - MAX 503 — page 27-28
- **TIG (GTAW) Section** — **page 29-32**
  - TIG dp 181H DC — page 33-34
  - TIG uP 273H DC — page 35-36
  - TIG uP 403H DC — page 37-38
  - TIG dp 221HPA AC-DC — page 39-40
  - TIG dp 293H AC-DC — page 41-42
  - TIG dp 403H AC-DC — page 43-44
- **MIG (GMAW) Section** — **page 45-48**
  - Miggy 171 — page 49-50
  - Iron-Mig 201 — page 51-52
  - Iron-Mig 221-221P — page 53-58
  - Iron-Mig 303-303P — page 59-62
  - Iron-Mig 303 PFC - 303P PFC — page 63-66
  - MAX 403 + TOP 504 SM — page 67-68
  - MAX 403 + TOP 504 XM — page 69-70
  - MAX 403S + TOP 504 SM — page 71-72
  - MAX 403S + TOP 504 XM — page 73-74
  - MAX 503 + TOP 504 SM — page 75-76
  - Sky-Mig 353K — page 77-78
  - Sky-Mig 453K — page 79-80
  - Sky-Mig 353S — page 81-82
  - Sky-Mig 453S — page 83-84
  - Sky-Mig 553S — page 85-86
- **PLASMA Section** — **page 88-88**
  - Thor 41K PFC — page 89-90
  - Thor 73 — page 91-92
  - Thor 123 — page 93-94
  - PLASMA Consumables — page 95-96
- **MultiProcess Section** — **page 97-100**
- **Navy (Off-Shore) Section** — **page 101-104**
- **Mining Section** — **page 105-108**
- **Torches & Accessories** — **page 109-124**
- **GENERAL SALES CONDITIONS** — **page 127-128**

STEL.
More than what you ask.

From STEL we always give you more than what you ask for.

We have always been driven by a very simple idea, and that is to satisfy you. For this reason we decided from the start, to give you the tools you required, STEL are inspired by the extreme conditions in which you work, wherever you are, above or below ground, in a mine or on an oil rig in the middle of the sea, in the sun and the dust or working within an industrial factory.

For over thirty five years we have continued to develop our machines, perfecting every detail, electronic, mechanical, aesthetic, to obtain the best energy efficiency and maximum performance in any working environment.

The only thing that satisfies us at STEL today, as in the past, is to give you what you ask for, and more.

STEL in Castegnero.

Where tradition and innovation are welded together.

The positive mix, of Italian tradition and technological innovation was born in Stel in the year 1979 in Castegnero, a few kilometers from Vicenza. Here the green hills, the architecture Renaissance and the beauty of the landscapes have blended into the environment, which is corporate to the Barocco family.
These company founders continue to direct STEL forward in advanced technology, in the production of Inverter Welding and Plasma Cutting Machines.
A streamlined and dynamic reality, through which we put at your disposal our know-how, production and testing facillities, which are immediately recognizable for their quality including the aesthetic impact, ergonomic and attractive design.

Values.
Respect first.

Stel is your trusted partner, we at STEL understand the meaning of the word respect.

Customer respect

Technical requirements, business needs and conditions of sale are scrupulously met to the minimum detail.
Each contract with us is an absolute guarantee, Stel does not only offer the most sophisticated technologies on the market, but Stel is respectfully synonymous to all mandatory agreements.

Environmental compliance.

Our production facillities, assemblies and processes satisfy rigorous global environmental protection. To ensure that this essential form of respect towards the world we live in, STEL continuously perform rigorous internal controls in parallel to that carried out by the relevant authorities.

Machines equiped with a PFC Multi-Link™ system reinforces our commitment towards energy saving. We never tire of reminding STEL personel to be aware of the STEL environmental 'foot-print' STEL continue to provide our customers with products that have a positive environmental impact.

CSA Group

Certificate of Participation

This is to certify that

STEL S.r.l.

has been qualified by CSA International as a Testing Facility for

WITNESSED MANUFACTURER'S TESTING FOR CERTIFICATION PROGRAM
Based on ISO/IEC 17025:2005

Regulatory compliance.

We are one of the few manufacturers in the world to submit their machines to rigorous examination of the strongest Testing Institute around the world.

Furthermore, our production is approved by CSA International (based on ISO / IEC 17025: 2005) for export to North America. While our technical office has been Certified ISO / IEC 17025: 2005. Therefore, from the compliance of these regulations is determined reliability, safety with newest operational functions and Features that distinguish STEL in the global market.

Technologies

Approved to exceed the limits!

Reliability and performance are our obsession. The pursuit of perfection is extreme in every detail, from the production to the calibration has brought STEL machines to meet the highest international criteria of resistance and functionality, being recognized as exclusive products suitable for extreme use.

Every year we reinvest 10% of our turnover to develop product performance and make more environmentally efficient.

International market.

STEL experience has no geographical limits.

Our reliability is recognized worldwide. Our products are present on all continents, thanks to a global professional network of established partners.
The continued international expansion has led us to open offices in Germany, Poland and Turkey.

Application areas.

Whatever your needs, wherever you operate, STEL recognise the world as our field of application.

From the daily engagements with our domestic and international customer base this opens up to STEL each individual need and challenges. This results with STEL having developed the perfect machine for your market sector required for operating in a specific professional welding environment.

EN1090

As of 1st July 2014, all construction products on the market must comply with the new regulation standard EN 1090 with special emphasis being placed on written declaration of performance and modified CE marking. This is a major change as affixing of CE marking. New elements in the EU-Construction Products Regulation 305/ 2011 **(CPR) and relative EU Directive 89/106/EEC, include the CE marking of construction products** according to the technical specification coordinated by manufacturers and distributors is mandatory; furthermore, CE marking is the only legally regulated marking which states that the construction product achieves its declared performance.
Therefore,with the new standard EN1090 being regulated, major changes to the production process in both large and small manufacturers can be expected. With obligations to internal quality procedures for proving conformity of the welding process, is consistent with the required normatives.

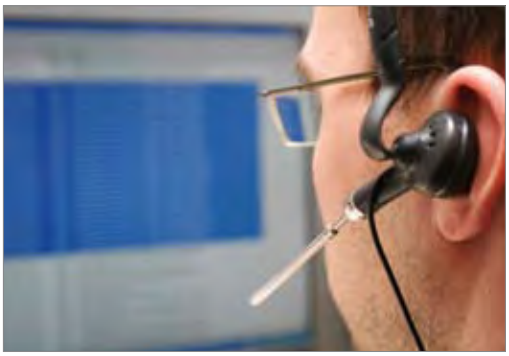

*** Products apply to steelwork including site construction.**

STEL always at your side.

For all the products of **Execution Class 1 and 2 EXC1 and EXC2** (the most used) Stel will offer a package of **WPQR** (proceedure Welding Procedure Qualification Records) from which they derive a set of production standards WPS (Welding Procedure Specifications) according to EN / ISO 15612 that will help companies to improve their CE Certification of the welded products, facilitating the procedure.

Quality - Validity - Saving- Trasparency

1) Quality:
The Stel WPQR and WPS are certified by TUV according to ISO 3834.

2) Validity:
Execution Class EXC1 and EXC2
Wires diameters 1.0 mm - 2.0 mm G46MG3SI type 1 UNI EN 14341
Mixed Gas 82-18% 3.1 certified to EN ISO 14175
Material class S355-J2 certified to EN 15608
MAX® Power Sources 403-403S-503 with different types of separate Wire Feed Systems: TOP 504 SM-XM
certified functions in harmony with the standards EN 60974-1 EN 60974-10

3) Saving:
The average savings for a small / medium business that requires at least 2-3 WPQR with 5-6 WPS has been calculated to be at least 3000 - 5000 Euro.

4) Trasparency:
The purchase of the package and WPS is only for the first installation.
The end user will be registered in the Stel system that will recognize the registration for the next purchased plants.

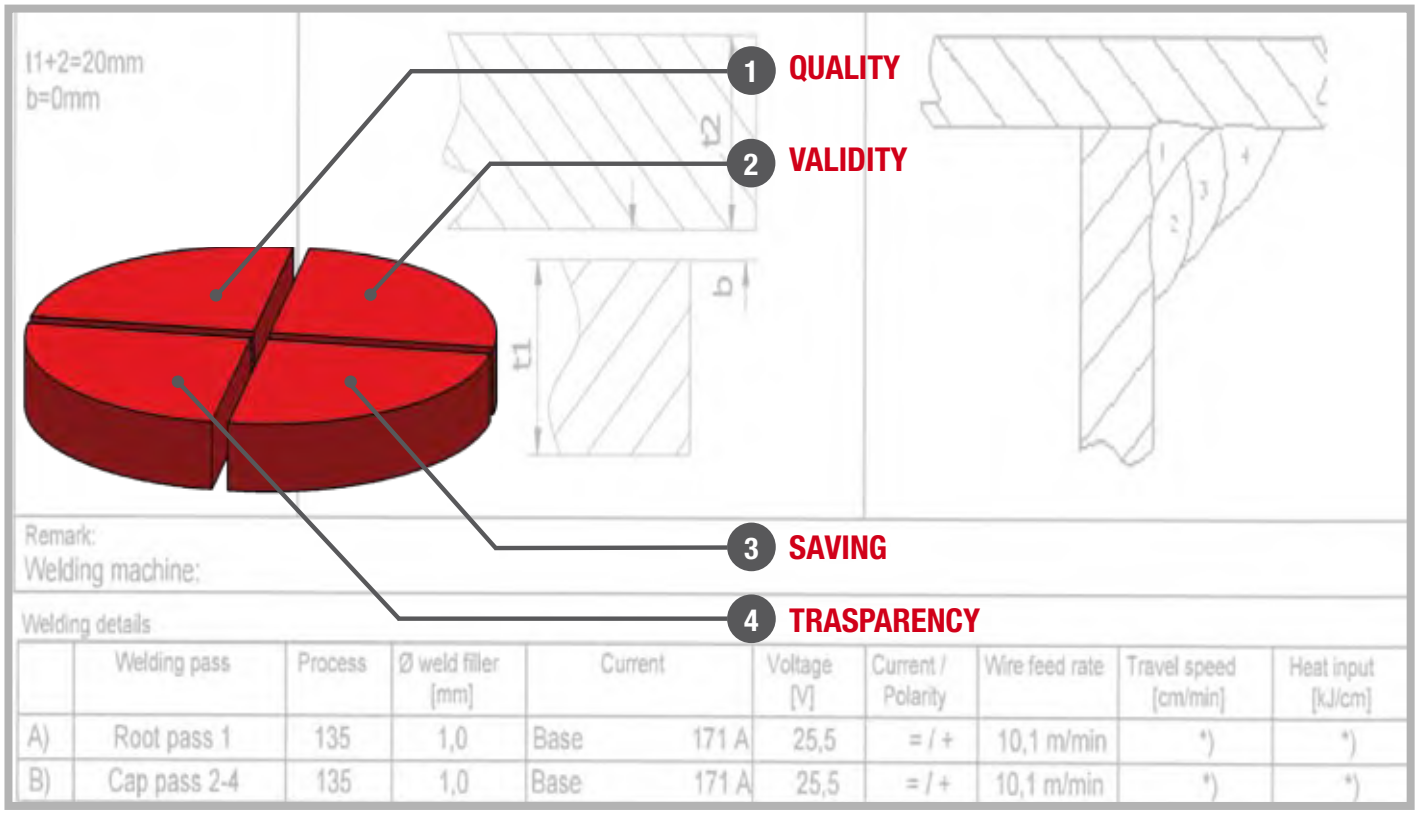

	Welding pass	Process	Ø weld filler [mm]	Current	Voltage [V]	Current / Polarity	Wire feed rate	Travel speed [cm/min]	Heat input [kJ/cm]
A)	Root pass 1	135	1,0	Base 171 A	25,5	= / +	10,1 m/min	*)	*)
B)	Cap pass 2-4	135	1,0	Base 171 A	25,5	= / +	10,1 m/min	*)	*)

STICK (SMAW)

www.stelgroup.it

INVERTER / INVERTER PFC RANGE

SKY 156

STICK
(SMAW)

TIG | MOTOGEN. | CE CERT. | 60974-10 60974-1 NORMATIVE

Inverter 1Phase

NEW

WARRANTY YEARS 2

Made in ITALY

Technical Data	SKY 156
Main Voltage	230/240 V
Phase	1
Frequency	50/60 Hz
Real Current (25%)	13,5
Real Power (25%)	3,1 KVA
Power Factor	0,65
Efficency	80 %
No Load Voltage	74 V
Current Range	5-120 A
Welding Current 25% (25°C)	120 A
Welding Current 60% (25°C)	85 A
Welding Current 100% (25°C)	70 A

Features	SKY 156
Earth Clamp - Cable/E.Holder	10 mm²
Degree of Protection	IP 23
Insulation Class	H
Work Temperature	40°C
Safety Approved	S
Length/Width/Height (mm)	330x135x240
Weight	4,2 Kg

The date is measured at an environment temperature of 25 °C

Materials	Welding Process	Environments	Main Features
• Mild Steels	• Electrode Welding	• Light Fabrications	• Inverter Technology
• Stainless Steels	• TIG Scratch Start Welding	• Special Maintenance	• 3,25Ø Electrode
• Castings		• Ordinary Maintenance	• OK motogenerator
		• Auto repair	• Ease of operation
		• Building and plumbing	• Portable
		• Electricians and installers	• Fireproof plastic
		• Workshops	

Main Accessories

KIT SKY 156 DELUXE
- SKY 156
- Bag STEL
- Earth Clamp with 2m 16mm² rubber cable
- Elect. Holder with 3m 16mm² rubber cable
- Hand Welding Screen
- Wire Brush/Chipping Hammer

TIG TORCH 17V
Tig Torch with valve.
- Tig Torch 17V 4m Air Cod. 642830000L
- Tig Torch 17V 8m Air Cod. 642840000L

Complete Combo

Code	Description	
601426000L	Sky 156	**(Included with the Complete Combo)**
-	Earth Clamp with 1,6m 10mm² rubber cable	**(Included with the Complete Combo)**
-	Elect. Holder with 2,8m 10mm² rubber cable	**(Included with the Complete Combo)**
-	Hand Welding Screen	**(Included with the Complete Combo)**

DELUXE Combo

Code	Description	
601452000L	Sky 156	**(Included with the DELUXE Combo)**
-	Bag STEL	**(Included with the DELUXE Combo)**
-	Earth Clamp with 2m 16mm² rubber cable	**(Included with the DELUXE Combo)**
-	Elect. Holder with 3m 16mm² rubber cable	**(Included with the DELUXE Combo)**
-	Hand Welding Screen	**(Included with the DELUXE Combo)**
-	Wire Brush/Chipping Hammer	**(Included with the DELUXE Combo)**

Accessories

Code	Description	
6083600010	Welding KIT 16mm² Dinse 25	
601039000L	Cables KIT 16mm² Dinse 25	**(Included with the DELUXE Combo)**
6011410000	Bag STEL	
642830000L	Tig Torch TTS 17V 4m Air Dinse 25	
642840000L	Tig Torch TTS 17V 8m Air Dinse 25	
6604480000	Shoulder Strap	
6056100000	Gas Regulator with Flow Meter (Italian Gas Connection)	

MAX®142-161

STICK
(SMAW)

TIG | MOTOGEN. | CE CERT. | 60974-10 60974-1 NORMATIVE

Inverter 1Phase

WARRANTY YEARS 2

Made in ITALY

Technical Data	MAX®142	MAX®161
Main Voltage	230/240 V	230/240 V
Phase	1	1
Frequency	50/60 Hz	50/60 Hz
Real Current (30%)	14 A	16 A
Real Power (30%)	3,1 KVA	3,8 KVA
Power Factor	0,8	0,8
Efficency	83 %	86 %
No Load Voltage	75 V	75 V
Current Range	5-130 A	5-150 A
Welding Current 45% (25°C)	130 A	150 A
Welding Current 100% (25°C)	80 A	100 A
Welding Current 30% (40°C)	130 A	150 A
Welding Current 60% (40°C)	80 A	100 A
Welding Current 100% (40°C)	70 A	95 A

Features	MAX®142	MAX®161
Earth Clamp - Cable/E.Holder	16 mm²	16 mm²
Degree of Protection	IP 23	IP 23
Insulation Class	H	H
Work Temperature	40°C	40°C
Safety Approved	S	S
Length/Width/Height (mm)	330x135x270	330x135x270
Weight	5,3 Kg	5,5 Kg

The date is measured at an environment temperature of 40 °C

The MAX® Series of Welding Inverters, developed from STEL INVERTER TECHNOLOGY, concentrates a high excellence of welding performance in a portable lightweight compact structure.

With an operator-freindly easy to read front panel design, the selection of the correct parameter for each electrode diameter is immediate and uncomplicated.

The MAX® is also available with Bag Kit for transport everywhere.

Materials	Welding Process	Environments	Main Features
• Mild Steels	• Electrode Welding	• Light Fabrications	• Inverter Technology
• Stainless Steels	• TIG Scratch Start Welding	• Special Maintenance	• Ease of operation
• Castings		• Ordinary Maintenance	• Bag KIT
		• Auto repair	• Portable
		• Building and plumbing	• Fireproof plastic
		• Electricians and installers	
		• Workshops	

Main Accessories

Bag KIT MAX® 161
- MAX® 161
- Bag STEL
- Earth Clamp with 2m 16mm² rubber cable
- Elect. Holder with 3m 16mm² rubber cable

TIG TORCH 17V
Tig Torch with valve.
- Tig Torch 17V 4m Air Cod. 642830000L
- Tig Torch 17V 8m Air Cod. 642840000L

Welding KIT 16mm²
cod. 6083600010
- Earth Clamp with 2m 16mm² rubber cable
- Elect. Holder with 3m 16mm² rubber cable
- Hand Welding Screen
- Wire Brush/Chipping Hammer

Only Power Source

Code	Description
600378000L	MAX®142
607880000L	MAX®161

Bag KIT MAX®142

Code	Description	
600385000L	MAX®142	**(Included with the bag KIT)**
-	Cables KIT 16mm² Dinse 25	**(Included with the bag KIT)**
-	Bag STEL	**(Included with the bag KIT)**

Bag KIT MAX®161

Code	Description	
601258000L	MAX®161	**(Included with the bag KIT)**
-	Cables KIT 16mm² Dinse 25	**(Included with the bag KIT)**
-	Bag STEL	**(Included with the bag KIT)**

Accessories

Code	Description	
6083600010	Welding KIT 16mm² Dinse 25	
601039000L	Cables KIT 16mm² Dinse 25	**(Included with the bag KIT)**
6011410000	Bag STEL	**(Included with the bag KIT)**
642830000L	Tig Torch TTS 17V 4m Air Dinse 25	
642840000L	Tig Torch TTS 17V 8m Air Dinse 25	
6604480000	Shoulder Strap	
6056100000	Gas Regulator with Flow Meter (Italian Gas Connection)	

MAX®182

STICK
(SMAW)

TIG | MOTOGEN. | CE CERT. | NORMATIVE 60974-10 60974-1

Inverter 1Phase

WARRANTY YEARS 2

Made in ITALY

Technical Data	MAX®182
Main Voltage	230/240 V
Phase	1
Frequency	50/60 Hz
Real Current (15%)	15 A
Real Power (15%)	3,4 KVA
Power Factor	0,7
Efficency	80 %
No Load Voltage	85 V
Current Range	5-180 A
Welding Current 20% (25°C)	180 A
Welding Current 100% (25°C)	100 A
Welding Current 15% (40°C)	180 A
Welding Current 60% (40°C)	90 A
Welding Current 100% (40°C)	80 A

Features	MAX®182
Earth Clamp - Cable/E.Holder	16 mm²
Degree of Protection	IP 23
Insulation Class	H
Work Temperature	40°C
Safety Approved	S
Length/Width/Height (mm)	330x135x270
Weight	5,5 Kg

The date is measured at an environment temperature of 40 °C

The Inverter Welding Power Source MAX®182 developed by STEL with INVERTER technology, concentrates high welding performance in a compact structure. Ideal for 3,25Ø electrode and other type like 4,0Ø electrode.

The MAX® is also available with Bag Kit for transport everywhere.

MAX®182 is able to weld **3,25mm** electrode and also the **4mm** electrode.

Materials	Welding Process	Environments	Main Features
• Mild Steels	• Electrode Welding	• Light Fabrications	• Inverter Technology
• Stainless Steels	• TIG Scratch Start Welding	• Special Maintenance	• Digital Display
• Castings		• Ordinary Maintenance	• Ease of operation
		• Auto repair	• Robust
		• Building and plumbing	• Reliability
		• Electricians and installers	• 4,00Ø Electrode
		• Workshops	• Fireproof plastic

Main Accessories

Bag KIT MAX® 182
- MAX® 182
- Bag STEL
- Earth Clamp with 2m 16mm² rubber cable
- Elect. Holder with 3m 16mm² rubber cable

TIG TORCH 17V
Tig Torch with valve.
- Tig Torch 17V 4m Air Cod. 642830000L
- Tig Torch 17V 8m Air Cod. 642840000L

Welding KIT 16mm²
cod. 6083600010
- Earth Clamp with 2m 16mm² rubber cable
- Elect. Holder with 3m 16mm² rubber cable
- Hand Welding Screen
- Wire Brush/Chipping Hammer

Only Power Source

Code	Description
600484000L	MAX®182

Bag KIT MAX® 182

Code	Description	
600485000L	MAX®182	**(Included with the bag KIT)**
-	Cables KIT 16mm² Dinse 25	**(Included with the bag KIT)**
-	Bag STEL	**(Included with the bag KIT)**

STICK Combo-TIG Scratch

Code	Description
600484000L	MAX®182
601039000L	Cables KIT 16mm² Dinse 25
642830000L	Tig Torch TTS 17V 4m Air Dinse 25
6056100000	Gas Regulator with Flow Meter (Italian Gas Connection)

Accessories

Code	Description	
6083600010	Welding KIT 16mm² Dinse 25	
601039000L	Cables KIT 16mm² Dinse 25	**(Included with the bag KIT)**
6011410000	Bag STEL	**(Included with the bag KIT)**
642830000L	Tig Torch TTS 17V 4m Air Dinse 25	
642840000L	Tig Torch TTS 17V 8m Air Dinse 25	
6604480000	Shoulder Strap	
6056100000	Gas Regulator with Flow Meter (Italian Gas Connection)	

MAX®191 PFC

STICK
(SMAW)

TIG | MOTOGEN. | CE CERT. | NORMATIVE | PFC

Inverter 1Phase PFC

PFC Multi-Link™

WARRANTY YEARS 2

Made in ITALY

Technical Data	MAX®191 PFC
Voltage Range	**150 V —> 290 V**
Main Voltage	230 V
Phase	1
Frequency	50/60 Hz
Real Current (30%)	**13,5 A**
Real Power (30%)	2,9 KVA
Power Factor	**0,99**
Efficency	81 %
No Load Voltage	90 V
Current Range	5-160 A
Welding Current 35% (25°C)	160 A
Welding Current 100% (25°C)	110 A
Welding Current 30% (40°C)	160 A
Welding Current 60% (40°C)	115 A
Welding Current 100% (40°C)	100 A

Features	MAX®191 PFC
Earth Clamp - Cable/E.Holder	25 mm²
Degree of Protection	IP 23
Insulation Class	H
Work Temperature	40°C
Safety Approved	S
Length/Width/Height (mm)	440x160x300
Weight	8,5 Kg

The date is measured at an environment temperature of 40 °C

The Inverter Welding Power Source MAX®191 PFC developed by STEL with INVERTER technology, concentrates high welding performance in a compact structure. Ideal for 3,25Ø electrode and other type like 4,0Ø electrode.

Power Factor Correction regulating wave form distortion from Input Voltage and Current supply, providing a constant Voltage to the Inverter.

In respect of stringent EN Standards for Harmonic Distortion (EN 61000-3-12) and the energy efficiency ERP.
Energy savings of 30% compared to a normal Inverter and up to 50% to an SCR.

Control of PFC regulation through DSP technology.

MAX®191 PFC is able to weld **4mm** electrode from a **16 AMP**. fuse.

Materials	Welding Process	Environments	Main Features
• Mild Steels	• Electrode Welding	• Light Fabrications	• Inverter Technology
• Stainless Steels	• TIG Scratch Start Welding	• Special Maintenance	• Ease of operation
• Castings		• Ordinary Maintenance	• PFC
		• Auto repair	• Robust
		• Building and plumbing	• Reliability
		• Electricians and installers	• 4,00Ø Electrode
		• Workshops	• Fireproof plastic

Main Accessories

Bag KIT MAX® 191 PFC
- MAX® 191 PFC
- Bag STEL
- Earth Clamp with 3m 25mm² rubber cable
- Elect. Holder with 4m 25mm² rubber cable

Cables KIT
cod. 602060000L
- Earth Clamp with 3m 25mm² rubber cable
- Elect. Holder with 4m 25mm² rubber cable

TIG TORCH 26V
Tig Torch with valve.
- Tig Torch 26V 4m Air Cod. 642850000L
- Tig Torch 26V 8m Air Cod. 600971000L

Only Power Source

Code	Description
601279000L	MAX®191 PFC

Bag KIT MAX® 191 PFC

Code	Description	
601311000L	MAX®191 PFC	**(Included with the bag KIT)**
-	Cables KIT 25mm² Dinse 50	**(Included with the bag KIT)**
-	Bag STEL	**(Included with the bag KIT)**

STICK Combo-TIG Scratch

Code	Description
601279000L	MAX®191 PFC
6006610010	Welding KIT 25mm² Dinse 50
642850000L	Tig Torch TTS 26V 4m Air Dinse 50
6056100000	Gas Regulator with Flow Meter (Italian Gas Connection)

Accessories

Code	Description	
6013070000	Bag STEL	**(Included with the bag KIT)**
602060000L	Cables KIT 25mm² Dinse 50	**(Included with the bag KIT)**
6006610010	Welding KIT 25mm² Dinse 50	
6056100000	Gas Regulator with Flow Meter (Italian Gas Connection)	
642850000L	Tig Torch TTS 26V 4m Air Dinse 50	
600971000L	Tig Torch TTS 26V 8m Air Dinse 50	

MAX® dp 201C

STICK (SMAW)

TIG | MOTOGEN. | CE CERT. | NORMATIVE 60974-10 60974-1 | V.R.D. SYSTEM | HOT START

ROD PULSE | ARC FORCE | TIG LIFT | SLOPE DOWN

Inverter 1Phase

WARRANTY YEARS 2

Made in ITALY

Technical Data	MAX® dp 201C
Main Voltage	230/240 V
Phase	1
Frequency	50/60 Hz
Real Current (30%)	19 A
Real Power (30%)	4,4 KVA
Power Factor	0,8
Efficency	86 %
No Load Voltage	25-100 V
Current Range	4-200 A
Welding Current 30% (25°C)	200 A
Welding Current 100% (25°C)	160 A
Welding Current 20% (40°C)	200 A
Welding Current 60% (40°C)	160 A
Welding Current 100% (40°C)	140 A

Features	MAX® dp 201C
Earth Clamp - Cable/E.Holder	25 mm²
Degree of Protection	IP 23
Insulation Class	H
Work Temperature	40°C
Safety Approved	S
Length/Width/Height (mm)	330x135x270
Weight	6,8 Kg

The date is measured at an environment temperature of 40 °C

The Inverter Welding Power Source MAX® dp 201C developed by STEL concentrates high performance for MMA and Tig welding with the most stringent safety requirements for the work place. Advanced Technology owing to the use of the DSP (Digital Signal Processor) that controls all the inverter signals. V.R.D., TIG lift and variable slope down Features, satisfy the requirements of every work place.

With pulsing in TIG (up to 999 Hz) and in Electrode (innovative ARC PULSING - from 0,4 to 5 Hz) makes the MAX® dp 201C a really unique product.

The MAX® dp is also available with Bag Kit for transport everywhere.

Materials	Welding Process	Environments	Main Features
• Mild Steels	• Electrode Welding	• Light Fabrications	• Inverter Technology
• Stainless Steels	• Cellulosic Electrodes	• Ship-Building	• V.R.D.
• Castings	• TIG Lift Start Welding	• Auto repair	• D.S.P.
• Aluminum and Alloys		• Building and plumbing	• Arc Pulsing Elect. and Tig
		• Electricians and installers	• Bag STEL
		• Workshops	• Digital Display
			• Tig Lift
			• Slope Down Tig
			• Fireproof plastic

Main Accessories

Bag KIT MAX® dp 201C
- MAX® dp 201C
- Bag STEL
- Earth Clamp with 3m 25mm² rubber cable
- Elect. Holder with 4m 25mm² rubber cable

Cables KIT
cod. 602060000L
- Earth Clamp with 3m 25mm² rubber cable
- Elect. Holder with 4m 25mm² rubber cable

TIG TORCH 26V
Tig Torch with valve.
- Tig Torch 26V 4m Air Cod. 642850000L
- Tig Torch 26V 8m Air Cod. 600967000L

Remote Control Cad Cad RCCS
Remote Control with Rod Pulse
(Arc Pulsing).
Cod. 600571000L Remote
Cod. 600572000L Extension 10m

Only Power Source

Code	Description
607830000L	MAX® dp 201C

Bag KIT MAX® dp 201C

Code	Description	
601263000L	MAX® dp 201C	**(Included with the bag KIT)**
-	Cables KIT 25mm² Dinse 50	**(Included with the bag KIT)**
-	Bag STEL	**(Included with the bag KIT)**

STICK-TIG Lift Combo

Code	Description
607830000L	MAX® dp 201C
6006610010	Welding KIT 25mm² Dinse 50
642850000L	Tig Torch TTS 26V 4m Air Dinse 50
6056100000	Gas Regulator with Flow Meter (Italian Gas Connection)

Accessories

Code	Description	
602060000L	Cables KIT 25mm² Dinse 50	**(Included with the bag KIT)**
6006610010	Welding KIT 25mm² Dinse 50	
6011410000	Bag STEL	**(Included with the bag KIT)**
607140000L	Tig Torch TTS 17V 4m Air Dinse 50	
600967000L	Tig Torch TTS 17V 8m Air Dinse 50	
642850000L	Tig Torch TTS 26V 4m Air Dinse 50	
600971000L	Tig Torch TTS 26V 8m Air Dinse 50	
6604480000	Shoulder Strap	
600571000L	Remote Control RC1	
600572000L	Cable for Remote Control RC1 10m	
600573000L	Cable for Remote Control RC1 20m	
600574000L	Cable for Remote Control RC1 30m	
6056100000	Gas Regulator with Flow Meter (Italian Gas Connection)	

MAX® 223C

STICK
(SMAW)

TIG | MOTOGEN. | CE CERT. | NORMATIVE | V.R.D. | HOT START

DRIVE ARC | ARC FORCE | TIG LIFT | SLOPE DOWN

Inverter 3Phase

Made in ITALY

Technical Data	MAX® 223C Pipeline
Main Voltage	380/415 V
Phase	3
Frequency	50/60 Hz
Real Current (40%)	10 A
Real Power (40%)	11 KVA
Power Factor	0,7
Efficency	80 %
No Load Voltage	90 V
Current Range	4-220 A
Welding Current 50% (25°C)	220 A
Welding Current 100% (25°C)	180 A
Welding Current 40% (40°C)	220 A
Welding Current 60% (40°C)	180 A
Welding Current 100% (40°C)	165 A

Features	MAX® 223C Pipeline
Earth Clamp - Cable/E.Holder	50 mm²
Degree of Protection	IP 23
Insulation Class	H
Work Temperature	40°C
Safety Approved	S
Length/Width/Height (mm)	500x185x400
Weight	20 Kg

The date is measured at an environment temperature of 40 °C

The Inverter Welding Power Source MAX® 223C, has been designed for mainly welding on Pipeline work. Its principal characteristics are: Robust, portable and reliability.

Tig DC with a superb LIFT Start Ignition and DRIVE-ARC current for exact arc positioning on the pipe.

Variable Slope Down (0-10 seconds) to end current for a perfect crater filler.

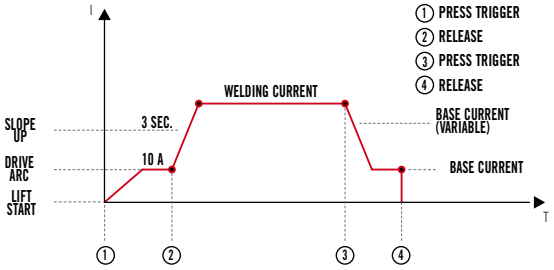

Materials	Welding Process	Environments	Main Features
• Mild Steels	• Electrode Welding	• Medium-Heavy Fabrications	• Inverter Technology
• Stainless Steels	• Cellulosic Electrodes	• Special Maintenance	• Fireproof plastic
• Castings	• TIG Lift Start Welding	• Petro-chemical	• Weight and reduced dimensions
• Aluminum and Alloys		• Ship-Building	• Remote Control
		• Installatori	• Arc-Force Variable
		• Maintenance	• Tig DC Lift Start Welding
			• V.R.D.
			• Hot Start Variable
			• Drive ARC

Main Accessories

Remote Control Cad Cad RC1
cod. 600571000L
- cod. 600098000L Cable 10m
- cod. 600099000L Cable 20m
- cod. 600101000L Cable 30m

Cables KIT
cod. 602060000L
- Earth Clamp with 3m 25mm² rubber cable
- Elect. Holder with 4m 25mm² rubber cable

TIG TORCH 26V
Tig Torch with valve.
- Tig Torch 26V 4m Air Cod. 642850000L
- Tig Torch 26V 8m Air Cod. 600971000L

Only Power Source

Code	Description
600857000L	MAX® 223C Pipeline

STICK Combo

Code	Description
600857000L	MAX® 223C Pipeline
602020000L	Cables KIT 50mm² Dinse 50

STICK-TIG Lift Combo

Code	Description
600857000L	MAX® 223C Pipeline
602020000L	Cables KIT 50mm² Dinse 50
6056100000	Gas Regulator with Flow Meter (Italian Gas Connection)
642850000L	Tig Torch TTS 26V 4m Air Dinse 50

Accessories

Code	Description
602020000L	Cables KIT 50mm² Dinse 50
642850000L	Tig Torch TTS 26V 4m Air Dinse 50
600971000L	Tig Torch TTS 26V 8m Air Dinse 50
600571000L	Remote Control RC1
600098000L	Cable for Remote Control RC1 10m
600099000L	Cable for Remote Control RC1 20m
600101000L	Cable for Remote Control RC1 30m
600102000L	Remote FOOT Control Cad 4,5m
6056100000	Gas Regulator with Flow Meter (Italian Gas Connection)

MAX® 403

STICK
(SMAW)

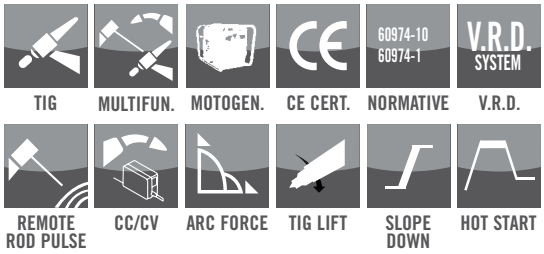

Inverter 3Phase

Made in ITALY

Technical Data	MAX® 403
Main Voltage	400 V
Phase	3
Frequency	50/60 Hz
Real Current (35%)	19 A
Real Power (35%)	11,2 KVA
Power Factor	0,85
Efficency	86 %
No Load Voltage	70 V
Current Range	4-400 A
Welding Current 45% (25°C)	400 A
Welding Current 60% (25°C)	370 A
Welding Current 100% (25°C)	350 A
Welding Current 35% (40°C)	400 A
Welding Current 60% (40°C)	350 A
Welding Current 100% (40°C)	300 A

Features	MAX® 403
Earth Clamp - Cable/E.Holder	50 mm²
Degree of Protection	IP 23
Insulation Class	H
Work Temperature	40°C
Safety Approved	S
Length/Width/Height (mm)	600x250x460
Weight	32 Kg

The date is measured at an environment temperature of 40 °C

Slope Down variable (0-10 sec.), Smooth descent for a perfect Crater-fill.

Arc Force variable (0-500%) a continuous arc for perfect fusion and penetration, no arc snuffing.

Hot Start variable (0-50%) for a precise arc ignition, eliminating electrode sticking.

Digital Amp/Volt Display

Tig Lift with ramp-down time (0-10sec.)

V.R.D. Safety System

MMA electrode Pulsing (only with Remote Control RCCS).

Materials	Welding Process	Environments	Main Features
• Mild Steels	• Electrode Welding	• Medium-Heavy Fabrications	• Inverter Technology
• Stainless Steels	• Cellulosic Electrodes (No Citoflex)	• Special Maintenance	• Weight and reduced dimensions
• Castings	• TIG Lift Start Welding	• Petro-chemical	• Arc-Force Variable
• Aluminum and Alloys		• Ship-Building	• Tig DC Lift Start Welding
		• Installers	• V.R.D.
		• Workshops	• Hot Start Variable
			• Arc Pulsing (with Remote)
			• CC-CV

Main Accessories

Cables KIT
cod. 602020000L
- Earth Clamp with 3m 50mm² rubber cable
- Elect. Holder with 4m 50mm² rubber cable

TIG TORCH 26V
Tig Torch with valve.
- Tig Torch 26V 4m Air Cod. 642850000L
- Tig Torch 26V 8m Air Cod. 600971000L

Remote Control Cad Cad RCCS
Remote Control with Rod Pulse (Arc Pulsing).
Cod. 600015000L Remote
Cod. 600026000L Extension 10m

TROLLEY KIT MMA XP
cod. 601473000L
The practical Trolley allows the movement of the Power Source in every condition of soil in safety and ease.

Only Power Source

Code	Description
600243000L	MAX® 403

STICK Combo

Code	Description
600243000L	MAX® 403
601473000L	Trolley MMA XP
602020000L	Cables KIT 50mm² Dinse 50

*** Check on Page 98 the complete list of MAX® 403 Accessories.**

Accessories

Code	Description
602020000L	Cables KIT 50mm² Dinse 50
601473000L	Trolley MMA XP
600343000L	Trolley MIG/TIG
601471000L	Water Cooler AWC MPS
607010001L	Earth Cable 70mm² 3m with Clamp
642850000L	Tig Torch TTS 26V 4m Air Dinse 50
600971000L	Tig Torch TTS 26V 8m Air Dinse 50
600015000L	Remote Control Cad RCCS
600026000L	Remote Control Cable Cad RCCS 10m
600027000L	Remote Control Cable Cad RCCS 20m
600028000L	Remote Control Cable Cad RCCS 30m
6056100000	Gas Regulator with Flow Meter (Italian Gas Connection)

MAX® 403S

STICK
(SMAW)

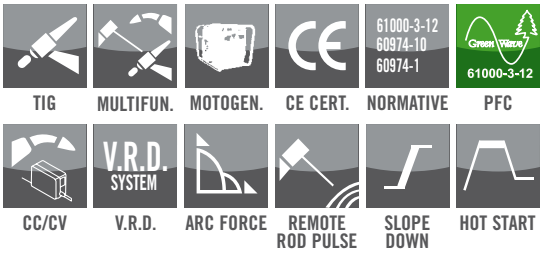

Inverter Multivoltage PFC

PFC
Multi-Link™

Made in ITALY

Technical Data	MAX® 403S
Voltage Range	**200 V —> 575 V**
Main Voltage	230-400-460-500 V
Phase	1/3
Frequency	50/60 Hz
Real Current (35%)	24,5-12,5 A (16,5 - 400V)
Real Power (35%)	9,7 KVA (400V)
Power Factor	**0,98**
Efficency	87 %
No Load Voltage	70 V
Current Range	4-400 A (4-300A 1F)
Welding Current 45% (25°C)	400 A
Welding Current 60% (25°C)	370 A
Welding Current 100% (25°C)	350 A
Welding Current 35% (40°C)	400 A
Welding Current 60% (40°C)	350 A
Welding Current 100% (40°C)	300 A (300A 1F)

Features	MAX® 403S
Earth Clamp - Cable/E.Holder	50 mm²
Degree of Protection	IP 23
Insulation Class	H
Work Temperature	40°C
Safety Approved	S
Length/Width/Height (mm)	600x250x460
Weight	40 Kg

The date is measured at an environment temperature of 40 °C

The MAX® 403 Multi-Process/Multi-Function Inverter is available in the following versions:

- MAX® 403
- MAX® 403S

For optimum flexibility STEL has developed a new and sophisticated PFC Multi-Link™ which perfects the automatic connection (without any manual operation) of the power source to any input plug in the World from 200V 3 phase to 575V 3 phase.
This new technology requires a lower power consumption by the power source which will pull less Amps.

The PFC technology of the MAX® 403S version, requires less electrical input to the Inverter power source by utilizing the total current available from the input supply. This results in more than 30% savings from avoiding any energy loss.
The unique PFC flexibility further increases the many advantages to the operator such as, providing opportunity to use welding cables up to 500m long, motor-generator friendly,..V.R.D..

Materials	Welding Process	Environments	Main Features
• Mild Steels	• Electrode Welding	• Medium-Heavy Fabrications	• Inverter Technology
• Stainless Steels	• Cellulosic Electrodes (No Citoflex)	• Special Maintenance	• PFC Multi-Link™
• Castings	• TIG Lift Start Welding	• Petro-chemical	• Arc-Force Variable
• Aluminum and Alloys		• Ship-Building	• Tig DC Lift Start Welding
		• Installers	• V.R.D.
		• Workshops	• Hot Start Variable
			• Arc Pulsing (with Remote)
			• CC-CV

Main Accessories

Cables KIT
cod. 602020000L
- Earth Clamp with 3m 50mm² rubber cable
- Elect. Holder with 4m 50mm² rubber cable

TIG TORCH 26V
Tig Torch with valve.
- Tig Torch 26V 4m Air Cod. 642850000L
- Tig Torch 26V 8m Air Cod. 600971000L

Remote Control Cad Cad RCCS
Remote Control with Rod Pulse (Arc Pulsing).
Cod. 600015000L Remote
Cod. 600026000L Extension 10m

TROLLEY KIT MMA XP
cod. 601473000L
The practical Trolley allows the movement of the Power Source in every condition of soil in safety and ease.

Only Power Source

Code	Description
601282000L	MAX® 403S

STICK Combo

Code	Description
601282000L	MAX® 403S
601473000L	Trolley MMA XP
602020000L	Cables KIT 50mm² Dinse 50

*** Check on Page 98 the complete list of MAX® 403S Accessories.**

Accessories

Code	Description
602020000L	Cables KIT 50mm² Dinse 50
601473000L	Trolley MMA XP
600343000L	Trolley MIG/TIG
601471000L	Water Cooler AWC MPS
607010001L	Earth Cable 70mm² 3m with Clamp
642850000L	Tig Torch TTS 26V 4m Air Dinse 50
600971000L	Tig Torch TTS 26V 8m Air Dinse 50
600015000L	Remote Control Cad RCCS
600026000L	Remote Control Cable Cad RCCS 10m
600027000L	Remote Control Cable Cad RCCS 20m
600028000L	Remote Control Cable Cad RCCS 30m
6056100000	Gas Regulator with Flow Meter (Italian Gas Connection)

MAX® 503

STICK
(SMAW)

TIG | MULTIFUN. | MOTOGEN. | CE CERT. | NORMATIVE 60974-10 60974-1 | V.R.D. SYSTEM

REMOTE ROD PULSE | ARC FORCE | SLOPE DOWN | HOT START

Inverter 3Phase

Made in ITALY

Technical Data	MAX® 503
Main Voltage	400/500 V
Phase	3
Frequency	50/60 Hz
Real Current (40%)	24,3/19,5 A
Real Power (40%)	17/13,5 KVA
Power Factor	0,8
Efficency	90 %
No Load Voltage	20-80 V
Current Range	4-500 A
Welding Current 45% (25°C)	500 A
Welding Current 100% (25°C)	400 A
Welding Current 40% (40°C)	500 A
Welding Current 60% (40°C)	440 A
Welding Current 100% (40°C)	380 A

Features	MAX® 503
Earth Clamp - Cable/E.Holder	50 mm²
Degree of Protection	IP 23
Insulation Class	H
Work Temperature	40°C
Safety Approved	S
Length/Width/Height (mm)	610x300x490
Weight	50 Kg

The date is measured at an environment temperature of 40 °C

Slope Down variable (0-10 sec.), Smooth descent for a perfect Crater-fill.

Arc Force variable (0-500%) a continuous arc for perfect fusion and penetration, no arc snuffing.

Hot Start variable (0-50%) for a precise arc ignition, eliminating electrode sticking.

Digital Amp/Volt Display

Tig Lift with ramp-down time (0-10sec.)

V.R.D. Safety System

MMA electrode Pulsing (only with Remote Control RCCS).

Materials	Welding Process	Environments	Main Features
• Mild Steels	• Electrode Welding	• Medium-Heavy Fabrications	• Inverter Technology
• Stainless Steels	• Cellulosic Electrodes	• Special Maintenance	• Multiprocess
• Castings	• TIG Scratch Start Welding	• Petro-chemical	• Digital Display
• Aluminum and Alloys		• Ship-Building	• V.R.D.
		• Installers	• Remote Control
		• Workshops	• Arc-Force Variable
			• Hot Start Variable
			• Arc Pulsing (with Remote)

Main Accessories

Tig Torch 26V
Tig Torch with valve.
- Tig Torch 26V 4m Air Cod. 642850000L
- Tig Torch 26V 8m Air Cod. 600971000L

Remote Control Cad Cad RCCS
Remote Control with Rod Pulse (Arc Pulsing).
Cod. 600015000L Remote
Cod. 600026000L Extension 10m

TROLLEY KIT MMA XP
cod. 601473000L
The practical Trolley allows the movement of the Power Source in every condition of soil in safety and ease.

Only Power Source

Code	Description
600002000L	MAX®503

STICK Combo

Code	Description
600002000L	MAX®503
601473000L	Trolley MMA XP
602020000L	Cables KIT 50mm² Dinse 50

*** Check on Page 98 the complete list of MAX® 503 Accessories.**

Accessories

Code	Description
602020000L	Cables KIT 50mm² Dinse 50
600343000L	Trolley MIG/TIG
601473000L	Trolley MMA XP
601471000L	Water Cooler AWC MPS
607010001L	Earth Cable 70mm² 3m with Clamp
642850000L	Tig Torch TTS 26V 4m Air Dinse 50
600971000L	Tig Torch TTS 26V 8m Air Dinse 50
600015000L	Remote Control Cad RCCS
600026000L	Remote Control Cable Cad RCCS 10m
600027000L	Remote Control Cable Cad RCCS 20m
600028000L	Remote Control Cable Cad RCCS 30m
6056100000	Gas Regulator with Flow Meter (Italian Gas Connection)

TIG (GTAW)

STEL
WELDING DIVISION

www.stelgroup.it

INVERTER / INVERTER PFC DC & AC RANGE

TIG dp 181H

TIG
(GTAW)

STICK | MOTOGEN. | CE CERT. | NORMATIVE 60974-10 60974-1 | V.R.D. SYSTEM | HF

TIG LIFT | SLOPE DOWN | TIG PULSE

DC TIG Inverter 1Phase

WARRANTY YEARS 2

Made in ITALY

Technical Data	TIG dp 181H
Main Voltage	230/240 V
Phase	1
Frequency	50/60 Hz
Real Current (20%)	13,5 A
Real Power (20%)	3 KVA
Power Factor	0,7
Efficency	83 %
No Load Voltage	95 V
Current Range	4-180 A
Welding Current 30% (25°C)	180 A
Welding Current 100% (25°C)	120 A
Welding Current 20% (40°C)	180 A
Welding Current 60% (40°C)	115 A
Welding Current 100% (40°C)	105 A

Features	TIG dp 181H
Earth Cable	25 mm²
Degree of Protection	IP 23
Insulation Class	H
Work Temperature	40°C
Safety Approved	S
Length/Width/Height (mm)	440x160x300
Weight	9,5 Kg

The date is measured at an environment temperature of 40 °C

The Inverter Welding Power Source TIG dp 181H developed by STEL concentrates excellent weld performance in both DC TIG welding with high frequency ignition, and Stick-electrode welding, The newly engineered design has resulted in a portable lightweight DC TIG machine of compact dimensions.

The advanced technology of the powerful microprocessor results in a perfect arc ignition every time.

Its principal characteristics are: TIG DC welding (2T, 4T), Pulsing, pre-gas and post-gas time adjustment, variable slope up and down, Tig lift, digital display to read the welding parameters, low energy consumption, V.R.D., up-down torch with potentiometer.

Materials	Welding Process	Environments	Main Features
• Mild Steels	• Tig HF Start Welding	• Light Fabrications	• Inverter Technology
• Stainless Steels	• Tig DC Lift start Welding	• Ship-Building	• V.R.D.
• Castings	• Electrode Welding	• Motocycle Industries	• Tig HF Start
• Nickel Steels and Alloys		• Nuclear Plant	• Slope UP / DOWN
• Copper and Alloys		• Building and plumbing	• Pre / Post gas
• Titanium		• Ordinary Maintenance	• Tig 2 T / 4 T
		• Special Maintenance	• DC Pulsing
			• Digital Display

Main Accessories

Bag KIT TIG® dp 181H
- TIG® dp 181H
- Bag STEL
- Earth Clamp with 3m 25mm² rubber cable
- Tig Torch TTS 17 4m Air + 7 Ways Plug

GAS REGULATOR WITH FLOWMETER
cod. 6056100000
Gas Regulator with Flow Meter for a perfect and safe gas regulation (italian gas connection).

TIG TORCH
Tig Torch with a professional and robust Torch trigger.
- Tig Torch 17 4m Air Cod. 609910000L
- Tig Torch 17 8m Air Cod. 600972000L
- Tig Torch 26 4m Air Cod. 609920000L
- Tig Torch 26 8m Air Cod. 600973000L

Shoulder Strap
cod. 600376000L
Pratical schoulder-strap, designed for comfortable carrying of the welding inverter.

Only Power Source

Code	Description
600186000L	TIG dp 181H

Bag KIT TIG dp 181H

Code	Description	
601309000L	TIG dp 181H	**(Included with the bag KIT)**
-	Tig Torch TTS 17 4m Air + 7 Ways Plug	**(Included with the bag KIT)**
-	Earth Clamp + Cable 25mm² 3m	**(Included with the bag KIT)**
-	Bag STEL	**(Included with the bag KIT)**

Accessories

Code	Description	
6013070000	Bag STEL	**(Included with the bag KIT)**
602040000L	Earth Clamp + Cable 25mm² 3m	**(Included with the bag KIT)**
609910000L	Tig Torch TTS 17 4m Air + 7 Ways Plug	**(Included with the bag KIT)**
600972000L	Tig Torch TTS 17 8m Air + 7 Ways Plug	
601089000L	Tig Torch TTS 17 4m Air Pot. 1K + 7 Ways Plug	
609920000L	Tig Torch TTS 26 4m Air + 7 Ways Plug	
600973000L	Tig Torch TTS 26 8m Air + 7 Ways Plug	
601094000L	Tig Torch TTS 26 4m Air Pot + 7 Ways Plug	
6056100000	Gas Regulator with Flow Meter (Italian Gas Connection)	
600571000L	Remote Control RC1	
600572000L	Cable for Remote Control RC1 10m	
600573000L	Cable for Remote Control RC1 20m	
600574000L	Cable for Remote Control RC1 30m	
600618000L	Remote FOOT Control Cad 4,5m	
6443500000	7 Ways Plug	**(Included with the Power Source)**
600376000L	Shoulder Strap	

TIG µP 273H

TIG
(GTAW)

STICK | MOTOGEN. | CE CERT. | NORMATIVE 60974-10 60974-1 | V.R.D. SYSTEM | HF

60 SLOT MEMORY | TIG LIFT | SLOPE UP/DOWN | TIG PULSE

DC TIG Inverter 3Phase

Made in ITALY

Technical Data	TIG µP 273H
Main Voltage	380/415 V
Phase	3
Frequency	50/60 Hz
Real Current (30%)	8,2 A
Real Power (30%)	5,2 KVA
Power Factor	0,8
Efficency	75 %
No Load Voltage	70 V
Current Range	4-230 A
Welding Current 40% (25°C)	230 A
Welding Current 100% (25°C)	200 A
Welding Current 30% (40°C)	230 A
Welding Current 60% (40°C)	190 A
Welding Current 100% (40°C)	175 A

Features	TIG µP 273H
Earth Clamp - Cable/E.Holder	50 mm²
Degree of Protection	IP 23
Insulation Class	H
Work Temperature	40°C
Safety Approved	S
Length/Width/Height (mm)	500x185x400
Weight	22 Kg

The date is measured at an environment temperature of 40 °C

The availability of 60 programmable memories allows for the construction and recall of all parameters selected.

HF (High Frequency) ignition, slope up and slope down adjustment (from 0 to 10s) for a perfect crater filler.
Pulsing adjustment from 0 to 300 Hz.

Its principal characteristics are: TIG DC welding (2T, 4T), Pulsing, pre-gas and post-gas time adjustment, variable slope up and down, Tig lift, digital display to read the welding parameters, low energy consumption, V.R.D., up-down torch.

Materials	Welding Process	Environments	Main Features
• Mild Steels	• Tig HF Start Welding	• Light Fabrications	• Inverter Technology
• Stainless Steels	• Tig DC Lift start Welding	• Ship-Building	• Tig HF Start
• Castings	• Spot Tig Welding	• Motocycle Industries	• Slope UP / DOWN
• Nickel Steels and Alloys	• Electrode Welding	• Nuclear Plant	• Post gas
• Copper and Alloys		• Building and plumbing	• Tig 2 T / 4 T
• Titanium		• Ordinary Maintenance	• DC Pulsing
		• Special Maintenance	• Digital Display
			• Fireproof plastic
			• V.R.D.

Only Power Source

Code	Description
600860000L	TIG µP 273H DC

Complete Combo Air

Code	Description
600860000L	TIG µP 273H DC
602000001L	Earth Cable 50mm² 3m
600706000L	Tig Torch TTS 26 4m Air + 7 Ways Plug C016
6056100000	Gas Regulator with Flow Meter (Italian Gas Connection)

Complete Combo H2O

Code	Description
600860000L	TIG µP 273H DC
600342000L	Water Cooler AWC MP
600514000L	Trolley MPL
602000001L	Earth Cable 50mm² 3m
600708000L	Tig Torch TTS 20 4m H2O + 7 Ways Plug C016
6056100000	Gas Regulator with Flow Meter (Italian Gas Connection)

Accessories

Code	Description	
600342000L	Water Cooler AWC MP	
600239000L	5L Tank Liquid STELFreeze	
600514000L	Trolley MPL	
601407000L	Trolley MPL Accessories (Tig Tube+Cables Hook+Tool Box)	
601408000L	Water Extensions Tube	
602000001L	Earth Cable 50mm² 3m	
600706000L	Tig Torch TTS 26 4m Air + 7 Ways Plug C016	
600707000L	Tig Torch TTS 26 8m Air + 7 Ways Plug C016	
600711000L	Tig Torch TTS 26 4m Air U/D + 7 Ways Plug C016	
600708000L	Tig Torch TTS 20 4m H2O + 7 Ways Plug C016	
600709000L	Tig Torch TTS 20 8m H2O + 7 Ways Plug C016	
600712000L	Tig Torch TTS 20 4m H2O U/D + 7 Ways Plug C016	
600571000L	Remote Control RC1	
600098000L	Cable for Remote Control RC1 10m	
600099000L	Cable for Remote Control RC1 20m	
600101000L	Cable for Remote Control RC1 30m	
600102000L	Remote FOOT Control Cad 4,5m	
6453700000	7 Ways Plug C016	**(Included with the Power Source)**
6056100000	Gas Regulator with Flow Meter (Italian Gas Connection)	

TIG µP 403H

TIG
(GTAW)

STICK | MOTOGEN. | CE CERT. | NORMATIVE 60974-10 60974-1 | HF

60 SLOT MEMORY | TIG LIFT | SLOPE UP/DOWN | TIG PULSE

DC TIG Inverter 3Phase

Technical Data	TIG µP 403H
Main Voltage	380/415 V
Phase	3
Frequency	50/60 Hz
Real Current (35%)	17,5 A
Real Power (35%)	8,6 KVA
Power Factor	0,75
Efficency	82 %
No Load Voltage	68 V
Current Range	4-350 A
Welding Current 50% (25°C)	350 A
Welding Current 100% (25°C)	300 A
Welding Current 35% (40°C)	350 A
Welding Current 60% (40°C)	300 A
Welding Current 100% (40°C)	250 A

Features	TIG µP 403H
Earth Clamp - Cable/E.Holder	50 mm²
Degree of Protection	IP 21S
Insulation Class	H
Work Temperature	40°C
Safety Approved	S
Length/Width/Height (mm)	600x300x615
Weight	45 Kg

The date is measured at an environment temperature of 40 °C

Possibility to save up to 60 Programs. Thanks to this system the orperator can easily recall all parameters already set.
Time saving and semplicity are the key for this innovative way of welding.

Its principal characteristics are: TIG DC welding (2T, 4T), post-gas time adjustment, variable slope up/slope down, Tig lift, digital display to read the welding parameters, low energy consumption, V.R.D., up-down torch, pulsing regulation.

Materials	Welding Process	Environments	Main Features
• Mild Steels	• Tig HF Start Welding	• Medium-Heavy Fabrications	• Inverter Technology
• Stainless Steels	• Tig DC Lift start Welding	• Ship-Building	• Tig HF Start
• Castings	• Spot Tig Welding	• Automotive Industries	• Slope UP / DOWN
• Nickel Steels and Alloys	• Electrode Welding	• Nuclear Plant	• Post gas
• Copper and Alloys		• Military plant	• Tig 2 T / 4 T
• Titanium		• Ordinary Maintenance	• DC Pulsing
		• Special Maintenance	• Digital Display

Main Accessories

TROLLEY MP
cod. 600343000L
The practical Trolley allows the movement of the Power Source in every condition of soil in safety and ease.

WATER COOLER AWC MPS
cod. 601471000L
Cooling System for TIG and MIG/MAG water torch.
Cooling Effeciency P = 1 KW (1L/min)
Flow Rate with Tig Torch 18 8mt = 1,7 L/min

WATER COOLER AWC MP HD
cod. 600388000L
High Performance Cooling System for TIG and MIG/MAG water torch.
Cooling Effeciency P = 1,5 KW (1L/min)
Flow Rate with Tig Torch 18 8mt = 2 L/min

TIG TORCH
Tig Torch with a professional and robust Torch trigger.
- Tig Torch 20 4m H2O Cod. 601292000L
- Tig Torch 20 8m H2O Cod. 601293000L
- Tig Torch 18 4m H2O Cod. 601295000L
- Tig Torch 18 8m H2O Cod. 601296000L

Only Power Source

Code	Description
600373000L	TIG µP 403H DC

Complete Combo H2O

Code	Description
600373000L	TIG µP 403H DC
600388000L	Water Cooler AWC MP HD (High Performance)
600343000L	Trolley Tig MP
602000001L	Earth Cable 50mm² 3m
601295000L	Tig Torch TTS 18 4m H2O + 2 Ways Plug
6056100000	Gas Regulator with Flow Meter (Italian Gas Connection)

Accessories

Code	Description	
601471000L	Water Cooler AWC MPS	
600388000L	Water Cooler AWC MP HD (High Performance)	
600239000L	5L Tank Liquid STELFreeze	
600343000L	Trolley Tig MP	
602000001L	Earth Cable 50mm² 3m	
601292000L	Tig Torch TTS 20 4m H2O + 2 Ways Plug	
601293000L	Tig Torch TTS 20 8m H2O + 2 Ways Plug	
601294000L	Tig Torch TTS 20 4m H2O U/D + 14 Ways Plug	
601295000L	Tig Torch TTS 18 4m H2O + 2 Ways Plug	
601296000L	Tig Torch TTS 18 8m H2O + 2 Ways Plug	
601297000L	Tig Torch TTS 18 4m H2O U/D + 14 Ways Plug	
601287000L	2 Ways Plug	**(Included with the Power Source)**
601286000L	14 Ways Plug	
600571000L	Remote Control RC1	
601288000L	Cable for Remote Control RC1 10m	
601289000L	Cable for Remote Control RC1 20m	
601291000L	Cable for Remote Control RC1 30m	
601285000L	Remote FOOT Control Cad 4,5m	
6056100000	Gas Regulator with Flow Meter (Italian Gas Connection)	

TIG dp 221Hpa AC-DC

TIG
(GTAW)

AC-DC | STICK | MOTOGEN. | CE CERT. | NORMATIVE (61000-3-12 60974-10 60974-1) | PFC (61000-3-12)

V.R.D. SYSTEM | 60 SLOT MEMORY | HF | TIG LIFT | SLOPE UP/DOWN | TIG PULSE

AC-DC TIG Inverter PFC 1Phase

PFC Multi-Link™

WARRANTY YEARS 2

Made in ITALY

Technical Data	TIG dp 221Hpa AC-DC	
Voltage Range	**90 V —> 290 V**	
Main Voltage	115 V	230 V
Phase	1	1
Frequency	50/60 Hz	50/60 Hz
Real Current (20%)	**14 A**	**11 A**
Real Power (20%)	3,5 KVA	2,5 KVA
Power Factor	**0,99**	**0,99**
Efficency	79 %	76 %
No Load Voltage	44 V	65 V
Current Range	4-155 A	4-220 A
Welding Current 30% (25°C	155 A	220 A
Welding Current 100% (25°C)	120 A	165 A
Welding Current 20% (40°C)	155 A	220 A
Welding Current 60% (40°C)	130 A	165 A
Welding Current 100% (40°C)	110 A	145 A

Features	TIG dp 221Hpa AC-DC
Earth Clamp - Cable/E.Holder	50 mm²
Degree of Protection	IP 23
Insulation Class	H
Work Temperature	40°C
Safety Approved	S
Length/Width/Height (mm)	500x190x400
Weight	18,8 Kg

The date is measured at an environment temperature of 40 °C

This generation of Inverter is able to optimize the input power with the innovative PFC (Power Factor Correction) feature.
The advance PFC dynamics allows the complete exploitation of the available input amps resulting in the delivery of the required Welding Current without power leakage.

The Tig dp 221Hpa Auto-sensing is able to operate from any 1Phase input voltage in the world. This sophisticated device automatically links the primary Voltage supplied from 90V up to 290V without manually linking primary voltage terminals.
No switching or internal link-up required by the operator.

The INVERTER reliability is drastically improved compensating for any Voltage spike that occurs within the input range when being used with standard or smaller motor-generators.

Materials	Welding Process	Environments	Main Features
• Aluminum and Alloys	• Tig AC and DC Welding	• Medium-Light Fabrications	• Inverter Technology
• Mild Steels	• Tig HF Start Welding	• Special Maintenance	• Fireproof plastic
• Stainless Steels	• Tig DC Lift start Welding	• Petro-chemical	• TIG Assymetric Mode
• Nickel Steels and Alloys	• Spot Tig Welding	• Motocycle Industries	• Complete AC Regulation
• Castings	• Electrode Welding	• Nuclear Plant	• Tig AC and DC Welding
• Copper and Alloys		• Food Industries	• PFC Multi-Link™
• Titanium		• Aerospace Industries	• V.R.D.
			• AC and DC Pulsing

Main Accessories

Trolley MPL
cod. 600514000L
The practical Trolley allows the movement of the Power Source in every condition of soil in safety and ease.

WATER COOLER AWC MP
cod. 600342000L
Cooling System for TIG and MIG/MAG water torch.
Cooling Effeciency P = 0,5 KW (1L/min)
Flow Rate with Tig Torch 18 8mt = 1,7 L/min

TIG TORCH
Tig Torch with a professional and robust Torch trigger.
- Tig Torch 26 4m H2O Cod. 600706000L
- Tig Torch 26 8m H2O Cod. 600707000L
- Tig Torch 20 4m H2O Cod. 600708000L
- Tig Torch 20 8m H2O Cod. 600709000L

TANK STELFreeze
cod. 600239000L
5 Liters Tank for Water Cooling System.

Only Power Source

Code	Description
607540000L	TIG dp 221Hpa AC-DC

Complete Combo H2O

Code	Description
607540000L	TIG dp 221Hpa AC-DC
600342000L	Water Cooler AWC MP
600514000L	Trolley MPL
602000001L	Earth Cable 50mm² 3m
600708000L	Tig Torch TTS 20 4m H2O + 7 Ways Plug C016
6056100000	Gas Regulator with Flow Meter (Italian Gas Connection)

Accessories

Code	Description	
600342000L	Water Cooler AWC MP	
600239000L	5L Tank Liquid STELFreeze	
600514000L	Trolley MPL	
601407000L	Trolley MPL Accessories (Tig Tube+Cables Hook+Tool Box)	
601408000L	Water Extensions Tube	
602000001L	Earth Cable 50mm² 3m	
600706000L	Tig Torch TTS 26 4m Air + 7 Ways Plug C016	
600707000L	Tig Torch TTS 26 8m Air + 7 Ways Plug C016	
600711000L	Tig Torch TTS 26 4m Air U/D + 7 Ways Plug C016	
600708000L	Tig Torch TTS 20 4m H2O + 7 Ways Plug C016	
600709000L	Tig Torch TTS 20 8m H2O + 7 Ways Plug C016	
600712000L	Tig Torch TTS 20 4m H2O U/D + 7 Ways Plug C016	
600571000L	Remote Control RC1	
600098000L	Cable for Remote Control RC1 10m	
600099000L	Cable for Remote Control RC1 20m	
600101000L	Cable for Remote Control RC1 30m	
600102000L	Remote FOOT Control Cad 4,5m	
6453700000	7 Ways Plug C016	**(Included with the Power Source)**
6056100000	Gas Regulator with Flow Meter (Italian Gas Connection)	

TIG µP 293H AC-DC

TIG
(GTAW)

AC-DC | STICK | MOTOGEN. | CE CERT. | NORMATIVE 60974-10 60974-1 | HF

60 SLOT MEMORY | TIG LIFT | SLOPE UP/DOWN | TIG PULSE

AC-DC TIG Inverter 3Phase

Technical Data	TIG µP 293H AC-DC
Main Voltage	380/415 V
Phase	3
Frequency	50/60 Hz
Real Current (25%)	9 A
Real Power (25%)	6,2 KVA
Power Factor	0,70
Efficency	75 %
No Load Voltage	68 V
Current Range	4-250 A
Welding Current 35% (25°C)	250 A
Welding Current 100% (25°C)	170 A
Welding Current 25% (40°C)	250 A
Welding Current 60% (40°C)	180 A
Welding Current 100% (40°C)	150 A

Features	TIG µP 293H AC-DC
Earth Clamp - Cable/E.Holder	50 mm²
Degree of Protection	IP 21S
Insulation Class	H
Work Temperature	40°C
Safety Approved	S
Length/Width/Height (mm)	600x300x615
Weight	42,5 Kg

The date is measured at an environment temperature of 40 °C

Possibility to save up to 60 Programs. Thanks to this system the orperator can easily recall all parameters already set.
Time saving and semplicity are the key for this innovative way of welding.

HF (High Frequency) ignition, slope up and slope down adjustment (from 0 to 10s) for a perfect crater filler.
Pulsing adjustment from 0 to 300 Hz.

Its principal characteristics are: TIG DC welding (2T, 4T), post-gas time adjustment, variable slope up/slope down, Tig lift, digital display to read the welding parameters, low energy consumption, V.R.D., up-down torch, pulsing regulation.

Materials	Welding Process	Environments	Main Features
• Mild Steels	• Tig AC and DC Welding	• Medium-Heavy Fabrications	• Inverter Technology
• Stainless Steels	• Tig HF Start Welding	• Ship-Building	• Tig HF Start
• Castings	• Tig DC Lift start Welding	• Automotive Industries	• Slope UP / DOWN
• Aluminum and Alloys	• Spot Tig Welding	• Nuclear Plant	• Post gas
• Nickel Steels and Alloys	• Electrode Welding	• Military plant	• Tig 2 T / 4 T
• Copper and Alloys		• Ordinary Maintenance	• Complete AC Regulation
• Titanium		• Special Maintenance	• Tig AC and DC Welding
			• Digital Display

Main Accessories

TROLLEY MP
cod. 600343000L
The practical Trolley allows the movement of the Power Source in every condition of soil in safety and ease.

WATER COOLER AWC MPS
cod. 601471000L
Cooling System for TIG and MIG/MAG water torch.
Cooling Effeciency P = 1 KW (1L/min)
Flow Rate with Tig Torch 18 8mt = 1,7 L/min

WATER COOLER AWC MP HD
cod. 600388000L
High Performance Cooling System for TIG and MIG/MAG water torch.
Cooling Effeciency P = 1,5 KW (1L/min)
Flow Rate with Tig Torch 18 8mt = 2 L/min

TIG TORCH
Tig Torch with a professional and robust Torch trigger.
- Tig Torch 20 4m H2O Cod. 601292000L
- Tig Torch 20 8m H2O Cod. 601293000L
- Tig Torch 18 4m H2O Cod. 601295000L
- Tig Torch 18 8m H2O Cod. 601296000L

Only Power Source

Code	Description
600349000L	TIG µP 293H AC-DC

Complete Combo H2O

Code	Description
600349000L	TIG µP 293H AC-DC
601471000L	Water Cooler AWC MPS
600343000L	Trolley Tig MP
602000001L	Earth Cable 50mm² 3m
601295000L	Tig Torch TTS 18 4m H2O + 2 Ways Plug
6056100000	Gas Regulator with Flow Meter (Italian Gas Connection)

Accessories

Code	Description	
601471000L	Water Cooler AWC MPS	
600388000L	Water Cooler AWC MP HD (High Performance)	
600239000L	5L Tank Liquid STELFreeze	
600343000L	Trolley Tig MP	
602000001L	Earth Cable 50mm² 3m	
601292000L	Tig Torch TTS 20 4m H2O + 2 Ways Plug	
601293000L	Tig Torch TTS 20 8m H2O + 2 Ways Plug	
601294000L	Tig Torch TTS 20 4m H2O U/D + 14 Ways Plug	
601295000L	Tig Torch TTS 18 4m H2O + 2 Ways Plug	
601296000L	Tig Torch TTS 18 8m H2O + 2 Ways Plug	
601297000L	Tig Torch TTS 18 4m H2O U/D + 14 Ways Plug	
601287000L	2 Ways Plug	**(Included with the Power Source)**
601286000L	14 Ways Plug	
600571000L	Remote Control RC1	
601288000L	Cable for Remote Control RC1 10m	
601289000L	Cable for Remote Control RC1 20m	
601291000L	Cable for Remote Control RC1 30m	
601285000L	Remote FOOT Control Cad 4,5m	
6056100000	Gas Regulator with Flow Meter (Italian Gas Connection)	

TIG µP 403H AC-DC

TIG
(GTAW)

AC-DC | STICK | MOTOGEN. | CE CERT. | NORMATIVE 60974-10 60974-1 | HF

60 SLOT MEMORY | TIG LIFT | SLOPE UP/DOWN | TIG PULSE

AC-DC TIG Inverter 3Phase

Technical Data	TIG µP 403H AC-DC
Main Voltage	380/415 V
Phase	3
Frequency	50/60 Hz
Real Current (45%)	14,5 A
Real Power (45%)	9,6 KVA
Power Factor	0,75
Efficency	81 %
No Load Voltage	65 V
Current Range	4-350 A
Welding Current 50% (25°C)	350 A
Welding Current 100% (25°C)	300 A
Welding Current 45% (40°C)	350 A
Welding Current 60% (40°C)	300 A
Welding Current 100% (40°C)	280 A

Features	TIG µP 403H AC-DC
Earth Clamp - Cable/E.Holder	50 mm²
Degree of Protection	IP 21S
Insulation Class	H
Work Temperature	40°C
Safety Approved	S
Length/Width/Height (mm)	600x300x615
Weight	50 Kg

The date is measured at an environment temperature of 40 °C

Possibility to save up to 60 Programs. Thanks to this system the orperator can easily recall all parameters already set.
Time saving and semplicity are the key for this innovative way of welding.

HF (High Frequency) ignition, slope up and slope down adjustment (from 0 to 10s) for a perfect crater filler.
Pulsing adjustment from 0 to 300 Hz.

Its principal characteristics are: TIG DC welding (2T, 4T), post-gas time adjustment, variable slope up/slope down, Tig lift, digital display to read the welding parameters, low energy consumption, V.R.D., up-down torch, pulsing regulation.

Materials	Welding Process	Environments	Main Features
• Mild Steels	• Tig AC and DC Welding	• Medium-Heavy Fabrications	• Inverter Technology
• Stainless Steels	• Tig HF Start Welding	• Ship-Building	• Tig HF Start
• Castings	• Tig DC Lift start Welding	• Automotive Industries	• Slope UP / DOWN
• Aluminum and Alloys	• Spot Tig Welding	• Nuclear Plant	• Post gas
• Nickel Steels and Alloys	• Electrode Welding	• Military plant	• Tig 2 T / 4 T
• Copper and Alloys		• Ordinary Maintenance	• Complete AC Regulation
• Titanium		• Special Maintenance	• Tig AC and DC Welding
			• Digital Display

Main Accessories

TROLLEY MP
cod. 600343000L
The practical Trolley allows the movement of the Power Source in every condition of soil in safety and ease.

WATER COOLER AWC MPS
cod. 601471000L
Cooling System for TIG and MIG/MAG water torch.
Cooling Effeciency P = 1 KW (1L/min)
Flow Rate with Tig Torch 18 8mt = 1,7 L/min

WATER COOLER AWC MP HD
cod. 600388000L
High Performance Cooling System for TIG and MIG/MAG water torch.
Cooling Effeciency P = 1,5 KW (1L/min)
Flow Rate with Tig Torch 18 8mt = 2 L/min

TIG TORCH
Tig Torch with a professional and robust Torch trigger.
- Tig Torch 20 4m H2O Cod. 601292000L
- Tig Torch 20 8m H2O Cod. 601293000L
- Tig Torch 18 4m H2O Cod. 601295000L
- Tig Torch 18 8m H2O Cod. 601296000L

Only Power Source

Code	Description
600345000L	TIG µP 403H AC-DC

Complete Combo H2O

Code	Description
600345000L	TIG µP 403H AC-DC
600388000L	Water Cooler AWC MP HD (High Performance)
600343000L	Trolley Tig MP
602000001L	Earth Cable 50mm² 3m
601295000L	Tig Torch TTS 18 4m H2O + 2 Ways Plug
6056100000	Gas Regulator with Flow Meter (Italian Gas Connection)

Accessories

Code	Description	
601471000L	Water Cooler AWC MPS	
600388000L	Water Cooler AWC MP HD (High Performance)	
600239000L	5L Tank Liquid STELFreeze	
600343000L	Trolley Tig MP	
602000001L	Earth Cable 50mm² 3m	
601292000L	Tig Torch TTS 20 4m H2O + 2 Ways Plug	
601293000L	Tig Torch TTS 20 8m H2O + 2 Ways Plug	
601294000L	Tig Torch TTS 20 4m H2O U/D + 14 Ways Plug	
601295000L	Tig Torch TTS 18 4m H2O + 2 Ways Plug	
601296000L	Tig Torch TTS 18 8m H2O + 2 Ways Plug	
601297000L	Tig Torch TTS 18 4m H2O U/D + 14 Ways Plug	
601287000L	2 Ways Plug	**(Included with the Power Source)**
601286000L	14 Ways Plug	
600571000L	Remote Control RC1	
601288000L	Cable for Remote Control RC1 10m	
601289000L	Cable for Remote Control RC1 20m	
601291000L	Cable for Remote Control RC1 30m	
601285000L	Remote FOOT Control Cad 4,5m	
6056100000	Gas Regulator with Flow Meter (Italian Gas Connection)	

MIG (GMAW)

INVERTER/INVERTER PFC/ STEP MIG RANGE

Miggy 171

MIG
(GMAW)

STICK | TIG LIFT | SYNERGIC | MOTOGEN. | CE CERT. | NORMATIVE 60974-10 60974-1

1Phase SYNERGIC Compact Inverter MIG/MAG

Technical Data	Miggy 171
Main Voltage	230/240 V
Phase	1
Frequency	50/60 Hz
Real Current (40%)	18,4 A
Real Power (40%)	4,3 KVA
Power Factor	0,8
Efficency	85 %
No Load Voltage	15-22 V
Current Range	35-150 A
Wire Feed Rollers	2
Welding Current 50% (25°C)	150 A
Welding Current 100% (25°C)	120 A
Welding Current 40% (40°C)	150 A
Welding Current 60% (40°C)	135 A
Welding Current 100% (40°C)	105 A

Features	Miggy 171
Earth Clamp - Cable/E.Holder	16 mm²
Degree of Protection	IP 23
Insulation Class	H
Work Temperature	40°C
Safety Approved	S
Length/Width/Height (mm)	500x190x400
Weight	19,0 Kg

The date is measured at an environment temperature of 40 °C

The principal characteristics are: possibility of MIG/MAG - TIG - MMA welding, microprocessor for functions control, anti-stick, TIG 2t and lift arc, designed and made in accordance with standard EN 60974/1 - EN 60974/10.

A highly competent wire feed mechanism results in smooth feeding of the wire producing a stable arc and quality welds.

Easy to change polarity for welding with gasless wires-no gas cilynder to carry. For site work the Miggy is ideal.

Materials	Welding Process	Environments	Main Features
• Mild Steels	• Electrode Welding	• Light Fabrications	• Synergic
• Stainless Steels	• Tig DC Lift start Welding	• Automotive Industries	• Inverter Technology
• Castings	• Mig/Mag Welding	• Special Maintenance	• 4,5kgs Spool
		• Ordinary Maintenance	• Multiprocess (MIG,TIG,MMA
		• Workshops	• Flux Cored welding
		• Installers	• Mig Torch included
			• Welding Kit included

Only Power Source

Code	Description	
601075000L	Miggy 171	
-	Cables KIT 16mm² Dinse 25	**(Included with the Power Source)**
-	Mig Torch TMS 15 3m Air	**(Included with the Power Source)**
-	Roller d.30 0,6-0,8 Carbon Steel	**(Included with the Power Source)**

Complete Combo MIG

Code	Description	
601075000L	Miggy 171	
6055900000	Gas Regulator 2 Gauges (Italian Gas Connection)	
-	Cables KIT 16mm² Dinse 25	**(Included with the Power Source)**
-	Mig Torch TMS 15 3m Air	**(Included with the Power Source)**
-	Roller d.30 0,6-0,8 Carbon Steel	**(Included with the Power Source)**

Complete Combo MIG/TIG/STICK

Code	Description	
601075000L	Miggy 171	
6060900000	Tig Torch TTSE 17 4m Air	
6055900000	Gas Regulator 2 Gauges (Italian Gas Connection)	
-	Cables KIT 16mm² Dinse 25	
-	Mig Torch TMS 15 3m Air	**(Included with the Power Source)**
-	Roller d.30 0,6-0,8 Carbon Steel	**(Included with the Power Source)**

Accessories

Code	Description	
601039000L	Cables KIT 16mm² Dinse 25	**(Included with the Power Source)**
6061000000	Mig Torch TMS 15 3m Air	**(Included with the Power Source)**
6060900000	Tig Torch TTSE 17 4m Air	
606070000L	Setting up KIT	**(Included with the Power Source)**
6085800000	Spool no gas d. 0,9mm Kg 4,5	
605250000L	Welding KIT Aluminum Mg d.1,0	
6349800000	Roller d.30 0,9 Filo Flux Cored no gas	
6316000000	Roller d.30 0,6-0,8 Carbon Steel	**(Included with the Power Source)**
6055900000	Gas Regulator 2 Gauges (Italian Gas Connection)	
6056100000	Gas Regulator with Flow Meter (Italian Gas Connection)	

Iron-Mig 201

MIG
(GMAW)

SYNERGIC | MOTOGEN. | CE CERT. | NORMATIVE
60974-10
60974-1

1Phase SYNERGIC Compact Inverter MIG/MAG

WARRANTY YEARS 2

Made in ITALY

Technical Data	Iron-Mig 201
Main Voltage	230/240 V
Phase	1
Frequency	50/60 Hz
Real Current (40%)	TBA
Real Power (40%)	TBA
Power Factor	0,8
Efficency	TBA
No Load Voltage	TBA
Current Range	20-190 A
Wire Feed Rollers	2
Welding Current 50% (25°C)	130 A
Welding Current 100% (25°C)	110 A
Welding Current 40% (40°C)	180 A
Welding Current 60% (40°C)	110 A
Welding Current 100% (40°C)	90 A

Features	Iron-Mig 201
Earth Clamp - Cable/E.Holder	16 mm²
Degree of Protection	IP 23
Insulation Class	H
Work Temperature	40°C
Safety Approved	S
Length/Width/Height (mm)	500x250x390
Weight	19,5 Kg

The date is measured at an environment temperature of 40 °C

The principal characteristics are: possibility of MIG/MAG and microprocessor for functions control.
Designed and made in accordance with standard EN 60974/1 - EN 60974/10.

A highly competent wire feed mechanism results in smooth feeding of the wire producing a stable arc and quality welds.

Easy to change polarity for welding with gasless wires-no gas cilynder to carry. For site work the Iron-Mig is ideal.

Materials	Welding Process	Environments	Main Features
• Mild Steels	• Mig/Mag Welding	• Light Fabrications	• Synergic
• Stainless Steels		• Automotive Industries	• Inverter Technology
• Castings		• Special Maintenance	• 4,5kgs Spool
		• Ordinary Maintenance	• Flux Cored welding
		• Workshops	• Mig Torch included
		• Installers	

Main Accessories

Trolley MPL
cod. 600514000L
The practical Trolley allows the movement of the Power Source in every condition of soil in safety and ease.

Trolley XPL
cod. 601468000L
The practical Trolley allows the movement of the Power Source in every condition of soil in safety and ease.

MIG/MAG Torch
Mig/Mag professional Torch
- Mig Torch 15 3m Air Cod. 6051000000

Spool-Gun Torch KIT
cod. 600513000L

Complete Combo MIG

Code	Description	
601463000L	Iron-Mig 201	
-	Earth Clamp + Cable 16mm² 3m	**(Included with the Power Source)**
-	Mig Torch TMS 15 3m Air	**(Included with the Power Source)**
-	Roller d.30 0,6-0,8 Carbon Steel	**(Included with the Power Source)**
6055900000	Gas Regulator 2 Gauges (Italian Gas Connection)	
601468000L	Trolley XPL	

SPOOL-GUN Combo

Code	Description	
601463000L	Iron-Mig 201	
-	Earth Clamp + Cable 16mm² 3m	**(Included with the Power Source)**
-	Mig Torch TMS 15 3m Air	**(Included with the Power Source)**
-	Roller d.30 0,6-0,8 Carbon Steel	**(Included with the Power Source)**
600513000L	Spool-Gun Torch KIT	
6055900000	Gas Regulator 2 Gauges (Italian Gas Connection)	
601468000L	Trolley XPL	

Accessories

Code	Description	
601039000L	Cables KIT 16mm² Dinse 25	**(Included with the Power Source)**
6061000000	Mig Torch TMS 15 3m Air	**(Included with the Power Source)**
600513000L	Spool-Gun Torch KIT	
606070000L	Setting up KIT	**(Included with the Power Source)**
6085800000	Spool no gas d. 0,9mm Kg 4,5	
605250000L	Welding KIT Aluminum Mg d.1,0	
6349800000	Roller d.30 0,9 Filo Flux Cored no gas	
6316000000	Roller d.30 0,6-0,8 Carbon Steel	**(Included with the Power Source)**
6055900000	Gas Regulator 2 Gauges (Italian Gas Connection)	
6056100000	Gas Regulator with Flow Meter (Italian Gas Connection)	

Iron-Mig 221-221P

MIG (GMAW)

STICK | TIG LIFT | PULSE / DOUBLE PULSE | MOTOGEN. | CE CERT. | NORMATIVE 60974-10 60974-1 | 29 SLOT MEMORY | SINERGICO

1Phase Compact Inverter MIG/MAG / Pulse MIG/MAG

ST-ARC™ **NEW STEL INNOVATION**

NEW

PULSE
DOUBLE PULSE
MIG/MAG
*ONLY FOR 221P

WARRANTY 2 YEARS

Made in ITALY

Technical Data	Iron-Mig 221-221P
Main Voltage	230/240 V
Phase	1
Frequency	50/60 Hz
Real Current (40%)	18,3 A
Real Power (40%)	4,2 KVA
Power Factor	0,7
Efficency	83 %
No Load Voltage	76 V
Current Range	15-200 A
Wire Feed Rollers	2
Welding Current 35% (25°C)	200 A
Welding Current 100% (25°C)	140 A
Welding Current 25% (40°C)	200 A
Welding Current 60% (40°C)	140 A
Welding Current 100% (40°C)	120 A

Features	Iron-Mig 221-221P
Earth Clamp	25 mm²
Degree of Protection	IP 23
Insulation Class	H
Work Temperature	40°C
Safety Approved	S
Length/Width/Height (mm)	500x250x390
Weight	19,5 Kg

The date is measured at an environment temperature of 40 °C

Compact lightweight and practical design makes the portable IRON MIG 221 – 221P ideally suited for all site-work and workshop applications.
Both models 221 and 221P LCD synergic technology provide for speedy selection of material thickness for welding.

A large clear user-freindly Digital Screen provides the operator with coherent parameter information. All parameters are displayed on the LCD screen to guide the operator through set-up and welding.

The function MULTISPOT, is a welding method which combines a pulse-arc with a pre-set time . Possibility to set both the welding time and the pause time separately.

Included Software:

- Fe 0,6mm
- Fe 0,8mm
- Fe 0,8mm Pulse (221P)
- Fe 1,0mm
- AlMg5 0,8mm (221P)
- AlMg5 1,0mm P.A.W. (221P)
- AlMg5 1,0mm Pulse (221P)
- AlMg5 1,0mm Double Pulse (221P)
- AlMg5 1,2mm (221P)
- AlSi3 0,8mm (221P)
- AlSi3 1,0mm P.A.W. (221P)
- AlSi3 1,0mm Pulse (221P)
- AlSi3 1,0mm Double Pulse (221P)
- AlSi3 1,2mm (221P)
- NiCr 0,8mm Pulse (221P)
- NiCr 1,0mm Pulse (221P)
- CuSi3 0,8mm Pulse (221P)
- CuSi3 1,0mm Pulse (221P)
- Flux Cored 0,9mm no GAS
- Flux Cored 0,9mm with GAS

Materials	Welding Process	Environments	Main Features
• Mild Steels	• Mig/Mag Welding	• Light Fabrications	• LCD Display
• Stainless Steels	• Tig DC Lift start Welding	• Automotive Industries	• P.A.W. (Precision Aluminum Welding)
• Castings	• Mig/Mag Pulse Welding (221P)	• Special Maintenance	• Synergic
• Aluminum and Alloys (221P)	• Mig/Mag Brazing (221P)	• Ordinary Maintenance	• Inverter Technology
		• Workshops	• 4,5/15 kgs Spool
		• Installers	• Flux Cored welding
			• Spot Mig

Main Accessories MIG

Trolley MPL
cod. 600514000L
The practical Trolley allows the movement of the Power Source in every condition of soil in safety and ease.

Trolley XPL
cod. 601468000L
The practical Trolley allows the movement of the Power Source in every condition of soil in safety and ease.

MIG/MAG Torch
Mig/Mag professional Torch
- Mig Torch 25 3m Air Cod. 6051500000

GAS REGULATOR 2 GAUGES
cod. 6055900000
Gas Regulator with 2 Gauges (Italian Gas Connection)

Only Power Source

Code	Description	
600423000L	Iron-Mig 221	
-	Roller d.30 0,8-1,0 Carbon Steel	**(Included with the Power Source)**
600425000L	Iron-Mig 221P	
-	Roller d.30 0,8-1,0 Carbon Steel	**(Included with the Power Source)**

MIG Combo Iron-Mig 221 (No Pulse)

Code	Description	
600423000L	Iron-Mig 221	
-	Roller d.30 0,8-1,0 Carbon Steel	**(Included with the Power Source)**
601468000L	Trolley XPL	
605150000L	Mig Torch TMS 25 3m Air	
602040000L	Earth Clamp + Cable 25mm² 3m	
6055900000	Gas Regulator 2 Gauges (Italian Gas Connection)	

MIG Combo Iron-Mig 221P (With Pulse)

Code	Description	
600425000L	Iron-Mig 221P	
-	Roller d.30 0,8-1,0 Carbon Steel	**(Included with the Power Source)**
601468000L	Trolley XPL	
605150000L	Mig Torch TMS 25 3m Air	
602040000L	Earth Clamp + Cable 25mm² 3m	
6055900000	Gas Regulator 2 Gauges (Italian Gas Connection)	

Main Accessories MIG Aluminum

Trolley MPL
cod. 600514000L
The practical Trolley allows the movement of the Power Source in every condition of soil in safety and ease.

KIT Aluminum TMS 25
cod. 601391000L
Complete Set-up Kit for welding Aluminum.

MIG/MAG Torch
Mig/Mag professional Torch
- Mig Torch 25 3m Air Cod. 6051500000

Earth Clamp with 25mm²
cod. 602040000L
- Earth Clamp with 3m 25mm² rubber cable

GAS REGULATOR 2 GAUGES
cod. 6055900000
Gas Regulator with 2 Gauges (Italian Gas Connection)

MIG Aluminum Combo

Code	Description	
600425000L	Iron-Mig 221P	
-	Roller d.30 0,8-1,0 Carbon Steel	**(Included with the Power Source)**
601391000L	KIT Saldatura Alluminio Mg d.1,0	
600514000L	Trolley MPL	
601407000L	Trolley MPL Accessories (Tig Tube+Cables Hook+Tool Box)	
605150000L	Mig Torch TMS 25 3m Air	
602040000L	Earth Clamp + Cable 25mm² 3m	
6055900000	Gas Regulator 2 Gauges (Italian Gas Connection)	

Main Accessories MIG/TIG

Trolley MPL
cod. 600514000L
The practical Trolley allows the movement of the Power Source in every condition of soil in safety and ease.

MIG/MAG Torch
Mig/Mag professional Torch
- Mig Torch 25 3m Air Cod. 6051500000

TIG TTSE Torch
cod. 6060900000

Earth Clamp with 25mm²
cod. 602040000L
- Earth Clamp with 3m 25mm² rubber cable

GAS REGULATOR 2 GAUGES
cod. 6055900000
Gas Regulator with 2 Gauges (Italian Gas Connection)

MIG/TIG Combo

Code	Description	
600425000L	Iron-Mig 221P	
-	Roller d.30 0,8-1,0 Carbon Steel	**(Included with the Power Source)**
600514000L	Trolley MPL	
601407000L	Trolley MPL Accessories (Tig Tube+Cables Hook+Tool Box)	
605150000L	Mig Torch TMS 25 3m Air	
6060900000	Tig Torch TTSE 17 4m Air	
602040000L	Earth Clamp + Cable 25mm² 3m	
6055900000	Gas Regulator 2 Gauges (Italian Gas Connection)	

Main Accessories MIG H2O

Trolley MPL
cod. 600514000L
The practical Trolley allows the movement of the Power Source in every condition of soil in safety and ease.

MIG/MAG Torch
Mig/Mag professional Torch
- Mig Torch 302 3m H2O Cod. 6006950000

Earth Clamp with 25mm²
cod. 602040000L
- Earth Clamp with 3m 25mm² rubber cable

GAS REGULATOR 2 GAUGES
cod. 6055900000
Gas Regulator with 2 Gauges (Italian Gas Connection)

Water Cooler Plug KIT
cod. 601413000L

Water Extensions Tube
cod. 601408000L

AWC MP
cod. 600342000L
Cooling System for TIG and MIG/MAG water torch.

MIG H2O Combo

Code	Description	
600425000L	Iron-Mig 221P	
-	Roller d.30 0,8-1,0 Carbon Steel	**(Included with the Power Source)**
600514000L	Trolley MPL	
601407000L	Trolley MPL Accessories (Tig Tube+Cables Hook+Tool Box)	
6006950000	Mig Torch TMS 302 3m H2O	
601408000L	Water Extensions Tube	
600342000L	Water Cooler AWC MP	
601413000L	Water Cooler Plug KIT	
602040000L	Earth Clamp + Cable 25mm² 3m	
6055900000	Gas Regulator 2 Gauges (Italian Gas Connection)	

Main Accessories SPOOL-GUN

Trolley MPL
cod. 600514000L
The practical Trolley allows the movement of the Power Source in every condition of soil in safety and ease.

Spool-Gun Torch KIT
cod. 600513000L

Earth Clamp with 25mm²
cod. 602040000L
- Earth Clamp with 3m 25mm² rubber cable

GAS REGULATOR 2 GAUGES
cod. 6055900000
Gas Regulator with 2 Gauges (Italian Gas Connection)

SPOOL-GUN Combo

Code	Description	
600425000L	Iron-Mig 221P	
-	Roller d.30 0,8-1,0 Carbon Steel	**(Included with the Power Source)**
600514000L	Trolley MPL	
601407000L	Trolley MPL Accessories (Tig Tube+Cables Hook+Tool Box)	
600513000L	Spool-Gun Torch KIT	
602040000L	Earth Clamp + Cable 25mm² 3m	
6055900000	Gas Regulator 2 Gauges (Italian Gas Connection)	

Main Accessories

Spool Holder 2,5KG d.100mm
cod. 601411000L

Spool Holder 5KG d.200mm
cod. 601412000L

Remote FOOT Control Cad 4,5m
cod. 600102000L

Spool-Gun Torch KIT
cod. 600513000L

TIG TTSE Torch
cod. 606090000

Accessories

Code	Description	
600514000L	Trolley MPL	
601407000L	Trolley MPL Accessories (Tig Tube+Cables Hook+Tool Box)	
601468000L	Trolley XPL	
601408000L	Water Extensions Tube	
601412000L	Spool Holder 5KG d.200mm	
601411000L	Spool Holder 2,5KG d.100mm	
600102000L	Remote FOOT Control Cad 4,5m	
TBA	Remote FOOT Control Connection	
600513000L	Spool-Gun Torch KIT	
600342000L	Water Cooler AWC MP	
601413000L	Water Cooler Plug KIT	
602040000L	Earth Clamp + Cable 25mm² 3m	
605150000L	Mig Torch TMS 25 3m Air	
6006950000	Mig Torch TMS 302 3m H2O	
6060900000	Tig Torch TTSE 17 4m Air	
606070000L	Setting Up KIT	**(Included with the Power Source)**
6085800000	Spool no gas d. 0,9mm Kg 4,5	
601391000L	Welding KIT Aluminum Mg d.1,0	
6349800000	Roller d.30 0,9 Filo Flux Cored no gas	
6316000000	Roller d.30 0,6-0,8 Carbon Steel	
6316200000	Roller d.30 0,8-1,0 Carbon Steel	**(Included with the Power Source)**
6364200000	Roller d.30 0,8-1,0 Aluminum	
634640000L	Roller d.30 1,0-1,2 Aluminum	
6004880000	Liner 0,8-1,2 for Aluminum	
6055900000	Gas Regulator 2 Gauges (Italian Gas Connection)	
6056100000	Gas Regulator with Flow Meter (Italian Gas Connection)	

Iron-Mig 303-303P

MIG
(GMAW)

MULTIFUN. | TIG LIFT | PULSE / DOUBLE PULSE | MOTOGEN. | CE CERT. | NORMATIVE 60974-10 60974-1 | 29 SLOT MEMORY | SINERGICO

3Phase Compact Inverter MIG/MAG / Pulse MIG/MAG

ST-ARC™ **NEW STEL INNOVATION**

NEW

Technical Data	Iron-Mig 303-303P
Main Voltage	400 V
Phase	3
Frequency	50/60 Hz
Real Current (40%)	TBD
Real Power (40%)	TBD
Power Factor	TBD
Efficency	TBD
No Load Voltage	TBD
Current Range	15-300 A
Wire Feed Rollers	4
Welding Current 35% (25°C)	TBD
Welding Current 100% (25°C)	TBD
Welding Current 25% (40°C)	TBD
Welding Current 60% (40°C)	TBD
Welding Current 100% (40°C)	TBD

Features	Iron-Mig 303-303P
Earth Clamp	35 mm²
Degree of Protection	IP 23
Insulation Class	H
Work Temperature	40°C
Safety Approved	S
Length/Width/Height (mm)	590x300x435
Weight	34 Kg

The date is measured at an environment temperature of 40 °C

Compact lightweight and practical design makes the portable 400V IRON MIG 303-303P ideally suited for all site-work and workshop applications.
Both models 303 and 303P LCD synergic technology provide for speedy selection of material thickness for welding.

A large clear user-freindly Digital Screen provides the operator with coherent parameter information. All parameters are displayed on the LCD screen to guide the operator through set-up and welding.

This is the real challenge that STEL has taken with the innovative **i-Cold Pulse.** Reducing the thermal heat STEL have been able to increase the welding speed by 35%.
The arc is more concentrated and intense granting a better penetration.

The function MULTISPOT, is a welding method which combines a pulse-arc with a pre-set time .
Possibility to set both the welding time and the pause time separately.

Materials	Welding Process	Environments	Main Features
• Mild Steels	• Mig/Mag Welding	• Light Fabrications	• LCD Display
• Stainless Steels (303P)	• Tig DC Lift start Welding	• Automotive Industries	• Synergic
• Castings	• Mig/Mag Pulse Welding (303P)	• Special Maintenance	• Inverter Technology
• Aluminum and Alloys (303P)	• Mig/Mag Brazing (303P)	• Ordinary Maintenance	• 4,5/15 kgs Spool
	• Electrode Welding	• Workshops	• P.A.W. (Precision Aluminum Welding)
		• Installers	• I-Cold Pulse (303P)
			• 4 rolls wire feeder
			• Spot Mig

Main Accessories

TROLLEY MP
cod. 600343000L
The practical Trolley allows the movement of the Power Source in every condition of soil in safety and ease.

WATER COOLER AWC MPX
cod. 601473000L
Cooling System for TIG and MIG/MAG water torch.
Cooling Effeciency P = 1 KW (1L/min)
Flow Rate with Tig Torch 18 8mt = 1,7 L/min

MIG/MAG Torch
Mig/Mag professional Torch
- Mig Torch 36 3m Air Cod. 6043500000

GAS REGULATOR 2 GAUGES
cod. 6055900000
Gas Regulator with 2 Gauges (Italian Gas Connection)

Only Power Source

Code	Description	
601435000L	Iron-Mig 303	
-	Roller d.37 1,0-1,2 Carbon Steel	**(Included with the Power Source)**
601429000L	Iron-Mig 303P	
-	Roller d.37 1,0-1,2 Carbon Steel	**(Included with the Power Source)**

MIG Combo Iron-Mig 303P

Code	Description	
601429000L	Iron-Mig 303P	
-	Roller d.37 1,0-1,2 Carbon Steel	**(Included with the Power Source)**
600343000L	Trolley MP	
6043500000	Torcia Mig TMS 36 4m Air	
602000001L	Cavo Massa 50mm² 3m	
6055900000	Riduttore a 2 manometri (Attacco Gas Italiano)	

MIG H2O Combo

Code	Description	
601429000L	Iron-Mig 303P	
-	Roller d.37 1,0-1,2 Carbon Steel	**(Included with the Power Source)**
600343000L	Trolley MP	
601473000L	Water Cooler AWC MPX	
6006950000	Mig Torch TMS 302 3m H2O	
602000001L	Earth Clamp + Cable 50mm² 3m	
6055900000	Gas Regulator 2 Gauges (Italian Gas Connection)	

Main Accessories MIG Aluminum

TROLLEY MP
cod. 600343000L
The practical Trolley allows the movement of the Power Source in every condition of soil in safety and ease.

4 ROLLERS DRIVING KIT 1,0mm ALU
cod. 601459000L
Complete kit with 4 rollers driving for 1,0mm Aluminum wires.

MIG/MAG Torch
Mig/Mag professional Torch
- Mig Torch 36 3m Air Cod. 6043500000

GAS REGULATOR 2 GAUGES
cod. 6055900000
Gas Regulator with 2 Gauges (Italian Gas Connection)

MIG Aluminum Combo

Code	Description
601429000L	Iron-Mig 303P
-	Roller d.37 1,0-1,2 Carbon Steel
600343000L	Trolley MP
6014590000	4 Rollers Driving KIT 1,0mm Aluminum
6043500000	Mig Torch TMS 36 4m Air
602000001L	Earth Clamp + Cable 50mm² 3m
6055900000	Gas Regulator 2 Gauges (Italian Gas Connection)

(Included with the Power Source)

Main Accessories TIG/MIG H2O Combo

TROLLEY MP
cod. 600343000L
The practical Trolley allows the movement of the Power Source in every condition of soil in safety and ease.

MIG/MAG Torch
Mig/Mag professional Torch
- Mig Torch 302 3m H2O Cod. 6006950000

TIG TTSE Torch
cod. 601294000L

Earth Clamp with 50mm²
cod. 602000001L
- Earth Clamp with 3m 50mm² rubber cable

GAS REGULATOR 2 GAUGES
cod. 6055900000
Gas Regulator with 2 Gauges (Italian Gas Connection)

TIG/MIG H2O Combo

Code	Description
601429000L	Iron-Mig 303P
-	Roller d.37 1,0-1,2 Carbon Steel
600343000L	Trolley MP
601473000L	Water Cooler AWC MPX
6006950000	Mig Torch TMS 302 3m H2O
601294000L	Tig Torch TTS 20 4m H2O U/D + 14 Ways Plug
602000001L	Earth Clamp + Cable 50mm² 3m
6055900000	Gas Regulator 2 Gauges (Italian Gas Connection)

(Included with the Power Source)

Main Accessories

Spool Holder 2,5KG d.100mm
cod. 601411000L

Spool Holder 5KG d.200mm
cod. 601412000L

Remote FOOT Control Cad 4,5m
cod. 600102000L

Spool-Gun Torch KIT
cod. 600513000L

TIG TTSE Torch
cod. 606090000

Accessories

Code	Description	
600343000L	Trolley MP	
601412000L	Spool Holder 5KG d.200mm	
601411000L	Spool Holder 2,5KG d.100mm	
600102000L	Remote FOOT Control Cad 4,5m	
TBA	Remote FOOT Control Connection	
600513000L	Spool-Gun Torch KIT	
601473000L	Water Cooler AWC MPX	
602000001L	Earth Clamp + Cable 50mm² 3m	
6043500000	Mig Torch TMS 36 3m Air	
6006950000	Mig Torch TMS 302 3m H2O	
601294000L	Tig Torch TTS 20 4m H2O U/D + 14 Ways Plug	
606070000L	Setting Up KIT	**(Included with the Power Source)**
6361600000	Roller d.37 1,0-1,2 Flux Cored no gas	
6360800000	Roller d.37 1,2-1,6 Flux Cored no gas	
6364800000	Roller d.37 0,6-0,8 Carbon Steel	
6350700000	Roller d.37 0,8-1,0 Carbon Steel	
6360600000	Roller d.37 1,0-1,2 Carbon Steel	**(Included with the Power Source)**
6364900000	Roller d.37 0,8-1,0 Aluminum	
6360900000	Roller d.37 1,0-1,2 Aluminum	
6014590000	4 Rollers Driving KIT 1,0mm Aluminum	
6014610000	4 Rollers Driving KIT 1,2mm Aluminum	
6004880000	Liner 0,8-1,2 for Aluminum	
6055900000	Gas Regulator 2 Gauges (Italian Gas Connection)	
6056100000	Gas Regulator with Flow Meter (Italian Gas Connection)	

Iron-Mig 303 PFC-303P PFC

MIG
(GMAW)

MULTIFUN. | TIG LIFT | PULSE / DOUBLE PULSE | MOTOGEN. | NORMATIVE 61000-3-12 60974-10 60974-1 | PFC 61000-3-12 | 29 SLOT MEMORY | SINERGICO | CE CERT.

3Phase Compact Inverter Multivoltage PFC MIG/MAG / Pulse MIG/MAG

ST-ARC™ — **NEW STEL INNOVATION**

Technical Data	Iron-Mig 303-303P PFC
Main Voltage	**200 V —> 575 V**
Phase	230-400-460-500 V
Frequency	1/3
Real Current (40%)	50/60 Hz
Real Power (40%)	TBD
Power Factor	TBD
Efficency	TBD
No Load Voltage	TBD
Current Range	TBD
Wire Feed Rollers	15-300 A
Welding Current 35% (25°C)	4
Welding Current 100% (25°C)	TBD
Welding Current 25% (40°C)	TBD
Welding Current 60% (40°C)	TBD
Welding Current 100% (40°C)	TBD
	TBD

Features	Iron-Mig 303-303P PFC
Earth Clamp	35 mm²
Degree of Protection	IP 23
Insulation Class	H
Work Temperature	40°C
Safety Approved	S
Length/Width/Height (mm)	680x300x435
Weight	42 Kg

The date is measured at an environment temperature of 40 °C

Compact lightweight and practical design makes the portable 400V IRON MIG 303-303P ideally suited for all site-work and workshop applications.
Both models 303 and 303P LCD synergic technology provide for speedy selection of material thickness for welding.

A large clear user-freindly Digital Screen provides the operator with coherent parameter information. All parameters are displayed on the LCD screen to guide the operator through set-up and welding.

This is the real challenge that STEL has taken with the innovative **i-Cold Pulse.** Reducing the thermal heat STEL have been able to increase the welding speed by 35%.
The arc is more concentrated and intense granting a better penetration.

The function MULTISPOT, is a welding method which combines a pulse-arc with a pre-set time .
Possibility to set both the welding time and the pause time separately.

Materials	Welding Process	Environments	Main Features
• Mild Steels	• Mig/Mag Welding	• Light Fabrications	• PFC
• Stainless Steels (303P)	• Tig DC Lift start Welding	• Automotive Industries	• LCD Display
• Castings	• Mig/Mag Pulse Welding (303P)	• Special Maintenance	• Synergic
• Aluminum and Alloys (303P)	• Mig/Mag Brazing (303P)	• Ordinary Maintenance	• Inverter Technology
	• Electrode Welding	• Workshops	• 4,5/15 kgs Spool
		• Installers	• P.A.W. (Precision Aluminum Welding)
			• I-Cold Pulse (303P)
			• 4 rolls wire feeder

Main Accessories

TROLLEY MP
cod. 600343000L
The practical Trolley allows the movement of the Power Source in every condition of soil in safety and ease.

WATER COOLER AWC MPX
cod. 601473000L
Cooling System for TIG and MIG/MAG water torch.
Cooling Effeciency P = 1 KW (1L/min)
Flow Rate with Tig Torch 18 8mt = 1,7 L/min

MIG/MAG Torch
Mig/Mag professional Torch
- Mig Torch 36 3m Air Cod. 6043500000

GAS REGULATOR 2 GAUGES
cod. 6055900000
Gas Regulator with 2 Gauges (Italian Gas Connection)

Only Power Source

Code	Description	
601437000L	Iron-Mig 303S	
-	Roller d.37 1,0-1,2 Carbon Steel	**(Included with the Power Source)**
601432000L	Iron-Mig 303P PFC	
-	Roller d.37 1,0-1,2 Carbon Steel	**(Included with the Power Source)**

MIG Combo Iron-Mig 303P

Code	Description	
601432000L	Iron-Mig 303S P	
-	Roller d.37 1,0-1,2 Carbon Steel	**(Included with the Power Source)**
600343000L	Trolley MP	
6043500000	Torcia Mig TMS 36 4m Air	
602000001L	Cavo Massa 50mm² 3m	
6055900000	Riduttore a 2 manometri (Attacco Gas Italiano)	

MIG H2O Combo

Code	Description	
601432000L	Iron-Mig 303PPFC	
-	Roller d.37 1,0-1,2 Carbon Steel	**(Included with the Power Source)**
600343000L	Trolley MP	
601473000L	Water Cooler AWC MPX	
6006950000	Mig Torch TMS 302 3m H2O	
602000001L	Earth Clamp + Cable 50mm² 3m	
6055900000	Gas Regulator 2 Gauges (Italian Gas Connection)	

Main Accessories MIG Aluminum

TROLLEY MP
cod. 600343000L
The practical Trolley allows the movement of the Power Source in every condition of soil in safety and ease.

4 ROLLERS DRIVING KIT 1,0mm ALU
cod. 601459000L
Complete kit with 4 rollers driving for 1,0mm Aluminum wires.

MIG/MAG Torch
Mig/Mag professional Torch
- Mig Torch 36 3m Air Cod. 6043500000

GAS REGULATOR 2 GAUGES
cod. 6055900000
Gas Regulator with 2 Gauges (Italian Gas Connection)

MIG Aluminum Combo

Code	Description	
601432000L	Iron-Mig 303S P	
-	Roller d.37 1,0-1,2 Carbon Steel	**(Included with the Power Source)**
600343000L	Trolley MP	
6014590000	4 Rollers Driving KIT 1,0mm Aluminum	
6043500000	Mig Torch TMS 36 4m Air	
602000001L	Earth Clamp + Cable 50mm² 3m	
6055900000	Gas Regulator 2 Gauges (Italian Gas Connection)	

Main Accessories TIG/MIG H2O Combo

TROLLEY MP
cod. 600343000L
The practical Trolley allows the movement of the Power Source in every condition of soil in safety and ease.

MIG/MAG Torch
Mig/Mag professional Torch
- Mig Torch 302 3m H2O Cod. 6006950000

TIG TTSE Torch
cod. 601294000L

Earth Clamp with 50mm²
cod. 602000001L
- Earth Clamp with 3m 50mm² rubber cable

GAS REGULATOR 2 GAUGES
cod. 6055900000
Gas Regulator with 2 Gauges (Italian Gas Connection)

TIG/MIG H2O Combo

Code	Description	
601432000L	Iron-Mig 303S P	
-	Roller d.37 1,0-1,2 Carbon Steel	**(Included with the Power Source)**
600343000L	Trolley MP	
601473000L	Water Cooler AWC MPX	
6006950000	Mig Torch TMS 302 3m H2O	
601294000L	Tig Torch TTS 20 4m H2O U/D + 14 Ways Plug	
602000001L	Earth Clamp + Cable 50mm² 3m	
6055900000	Gas Regulator 2 Gauges (Italian Gas Connection)	

Main Accessories

Spool Holder 2,5KG d.100mm
cod. 601411000L

Spool Holder 5KG d.200mm
cod. 601412000L

Remote FOOT Control Cad 4,5m
cod. 600102000L

Spool-Gun Torch KIT
cod. 600513000L

TIG TTSE Torch
cod. 601294000L

Accessories

Code	Description	
600343000L	Trolley MP	
601412000L	Spool Holder 5KG d.200mm	
601411000L	Spool Holder 2,5KG d.100mm	
600102000L	Remote FOOT Control Cad 4,5m	
TBA	Remote FOOT Control Connection	
600513000L	Spool-Gun Torch KIT	
601473000L	Water Cooler AWC MPX	
602000001L	Earth Clamp + Cable 50mm² 3m	
6043500000	Mig Torch TMS 36 3m Air	
6006950000	Mig Torch TMS 302 3m H2O	
601294000L	Tig Torch TTS 20 4m H2O U/D + 14 Ways Plug	
606070000L	Setting Up KIT	**(Included with the Power Source)**
6361600000	Roller d.37 1,0-1,2 Flux Cored no gas	
6360800000	Roller d.37 1,2-1,6 Flux Cored no gas	
6364800000	Roller d.37 0,6-0,8 Carbon Steel	
6350700000	Roller d.37 0,8-1,0 Carbon Steel	
6360600000	Roller d.37 1,0-1,2 Carbon Steel	**(Included with the Power Source)**
6364900000	Roller d.37 0,8-1,0 Aluminum	
6360900000	Roller d.37 1,0-1,2 Aluminum	
6014590000	4 Rollers Driving KIT 1,0mm Aluminum	
6014610000	4 Rollers Driving KIT 1,2mm Aluminum	
6004880000	Liner 0,8-1,2 for Aluminum	
6055900000	Gas Regulator 2 Gauges (Italian Gas Connection)	
6056100000	Gas Regulator with Flow Meter (Italian Gas Connection)	

MAX® 403
TOP 504 SM

MIG
(GMAW)

MULTIFUN. | MOTOGEN. | CE CERT. | NORMATIVE | V.R.D. | CC/CV

MEMORY | REMOTE ROD PULSE | ARC FORCE | TIG LIFT | SLOPE DOWN | HOT START

3phase MIG/MAG Inverter

ST-ARC™ — **NEW STEL INNOVATION**

EN 1090 WPQR APPROVED

Made in ITALY

Technical Data	MAX® 403
Main Voltage	400 V
Phase	3
Frequency	50/60 Hz
Real Current (35%)	19 A
Real Power (35%)	11,2 KVA
Power Factor	0,85
Efficency	86 %
No Load Voltage	70 V
Current Range	4-400 A
Wire Feed Rollers	4
Welding Current 45% (25°C)	400 A
Welding Current 60% (25°C)	370 A
Welding Current 100% (25°C)	350 A
Welding Current 35% (40°C)	400 A
Welding Current 60% (40°C)	350 A
Welding Current 100% (40°C)	300 A

Features	MAX® 403
Earth Clamp - Cable/E.Holder	70 mm²
Degree of Protection	IP 23
Insulation Class	H
Work Temperature	40°C
Safety Approved	S
Length/Width/Height (mm)	1040x50x1430
Weight (Complete Combo H2O)	126 Kg

The date is measured at an environment temperature of 40 °C

Technical Data wirefeed 4 rollers		
Roll Diameter	37	• Rollers changing without tools
Material	Aluminum	• Robust
Motor	DC Motor perm. magnet	• 4 Roll Feed
Pressure Unit	2 (Front and Rear)	• 2 Pressure Unit
Power	100 W	• Encoder Regulation
Main Voltage	24 V / 42 V	• Wirefeed Made in Switzerland
Max. wire speed	20 m/min	
Euro Connector	Brass Hexagonal	

Materials	Welding Process	Environments	Main Features
• Mild Steels	• Electrode Welding	• Medium-Heavy Fabrications	• Inverter Technology
• Stainless Steels	• Cellulosic Electrodes (No Citoflex)	• Heavy Industries	• Multiprocess
• Aluminum and Alloys	• TIG Lift Start Welding	• Special Maintenance	• Digital Display
• Nickel Steels and Alloys	• Mig/Mag Welding	• Petro-chemical	• V.R.D.
		• Nuclear Plant	• Arc-Force & Inductance Variable
		• Military plant	• CC-CV
		• Mining	

Main Accessories

TROLLEY MP
cod. 600343000L
The practical Trolley allows the movement of the Power Source in every condition of soil in safety and ease.

WATER COOLER AWC MPS
cod. 601471000L
Cooling System for TIG and MIG/MAG water torch.

MIG/MAG Torch
Mig/Mag professional Torch
- Mig Torch 503 4m H2O Cod. 6006980000

TOP 504 SM
cod. 600012001L
4 Rollers Wire Feeder for a professional welding.

Complete Combo H_2O

Code	Description
600361000L	MAX® 403
-	Wire Feed TOP 504 SM
-	Water Cooler AWC MPS
-	Water Cooler Plug MP for MAX® 403
-	Trolley MP
-	Kit MIG for Trolley MP
-	Interconnecting Cables 70mm² 5m H2O
600066001L	Wheels Kit for Wire Feed
6006980000	Mig Torch TMS 503 4m H2O
6055900000	Gas Regulator 2 Gauges (Italian Gas Connection)
607010001L	Earth Cable 70mm² 3m with Clamp

Accessories

Code	Description	
600343000L	Trolley MP	
600367000L	Kit MIG for Trolley MP	
600066001L	Wheels Kit for Wire Feed	
601471000L	Water Cooler AWC MPS	
600388000L	Water Cooler AWC MP HD (High Performance)	
600362000L	Water Cooler Plug MP for MAX® 403	
600239000L	5L Tank Liquid STELFreeze	
600407000L	Interconnecting Cables 70mm² 5m Air	
600408000L	Interconnecting Cables 70mm² 5m H2O	
600409000L	Interconnecting Cables 70mm² 10m Air	
600411000L	Interconnecting Cables 70mm² 10m H2O	
6043500000	Mig Torch TMS 36 4m Air	
6006970000	Mig Torch TMS 503 3m H2O	
6345000000	Roller d.37 0,8-1,0 Carbon Steel	
6315900000	Roller d.37 1,0-1,2 Carbon Steel	**(included with the TOP 504 SM/XM)**
6345100000	Roller d.37 1,2-1,6 Carbon Steel	
6345300000	Roller d.37 1,2-1,6 Flux Cored no gas	
6327200000	Roller d.37 1,6-2,4 Flux Cored no gas	
6345200000	Roller d.37 1,0-1,2 Aluminum	
6350500000	Roller d.37 1,6-2,4 Aluminum	

MAX® 403
TOP 504 XM

MIG
(GMAW)

MULTIFUN. | MOTOGEN. | CE CERT. | NORMATIVE | V.R.D. | CC/CV

MEMORY | REMOTE ROD PULSE | SYNERGIC | TIG LIFT | SLOPE DOWN | PULSE / DOUBLE PULSE

3phase SYNERGIC PULSE/DOUBLE PULSE MIG/MAG Inverter

ST-ARC™ — **NEW STEL INNOVATION**

Synergic EASY WELD — SELECT THE WIRE & WELD!

PULSE
DOUBLE PULSE
MIG/MAG

EN 1090 WPQR APPROVED

Made in ITALY

Technical Data	MAX® 403
Main Voltage	400 V
Phase	3
Frequency	50/60 Hz
Real Current (35%)	19 A
Real Power (35%)	11,2 KVA
Power Factor	0,85
Efficency	86 %
No Load Voltage	70 V
Current Range	4-400 A
Wire Feed Rollers	4
Welding Current 45% (25°C)	400 A
Welding Current 60% (25°C)	370 A
Welding Current 100% (25°C)	350 A
Welding Current 35% (40°C)	400 A
Welding Current 60% (40°C)	350 A
Welding Current 100% (40°C)	300 A

Features	MAX® 403
Earth Clamp - Cable/E.Holder	70 mm²
Degree of Protection	IP 23
Insulation Class	H
Work Temperature	40°C
Safety Approved	S
Length/Width/Height (mm)	1040x50x1430
Weight (Complete Combo H2O)	126 Kg

The date is measured at an environment temperature of 40 °C

Technical Data wirefeed 4 rollers		
Roll Diameter	37	• Rollers changing without tools
Material	Aluminum	• Robust
Motor	DC Motor perm. magnet	• 4 Roll Feed
Pressure Unit	2 (Front and Rear)	• 2 Pressure Unit
Power	100 W	• Encoder Regulation
Main Voltage	24 V / 42 V	• Wirefeed Made in Switzerland
Max. wire speed	20 m/min	
Euro Connector	Brass Hexagonal	

Materials	Welding Process	Environments	Main Features
• Mild Steels	• Electrode Welding	• Medium-Heavy Fabrications	• Synergic
• Stainless Steels	• Cellulosic Electrodes (No Citoflex)	• Heavy Industries	• Inverter Technology
• Aluminum and Alloys	• TIG Lift Start Welding	• Special Maintenance	• Multiprocess
• Nickel Steels and Alloys	• Mig/Mag Welding	• Petro-chemical	• Digital Display
	• Mig/Mag Pulse Welding	• Nuclear Plant	• V.R.D.
		• Military plant	• Arc-Force & Inductance Variable
		• Mining	• CC-CV

Main Accessories

TROLLEY MP
cod. 600343000L
The practical Trolley allows the movement of the Power Source in every condition of soil in safety and ease.

WATER COOLER AWC MPS
cod. 601471000L
Cooling System for TIG and MIG/MAG water torch.

MIG/MAG Torch
Mig/Mag professional Torch
- Mig Torch 503 4m H2O Cod. 6006980000

TOP 504 XM
cod. 600014001L
4 Rollers Wire Feeder for a professional welding.

Complete Combo H2O

Code	Description
601298000L	MAX® 403
-	Wire Feed TOP 504 XM
-	Water Cooler AWC MPS
-	Water Cooler Plug MP for MAX® 403
-	Trolley MP
-	Kit MIG for Trolley MP
-	Interconnecting Cables 70mm² 5m H2O
600066001L	Wheels Kit for Wire Feed
6006980000	Mig Torch TMS 503 4m H2O
6055900000	Gas Regulator 2 Gauges (Italian Gas Connection)
607010001L	Earth Cable 70mm² 3m with Clamp

Accessories

Code	Description	
600343000L	Trolley MP	
600367000L	Kit MIG for Trolley MP	
600066001L	Wheels Kit for Wire Feed	
601471000L	Water Cooler AWC MPS	
600388000L	Water Cooler AWC MP HD (High Performance)	
600362000L	Water Cooler Plug MP for MAX® 403	
600239000L	5L Tank Liquid STELFreeze	
600407000L	Interconnecting Cables 70mm² 5m Air	
600408000L	Interconnecting Cables 70mm² 5m H2O	
600409000L	Interconnecting Cables 70mm² 10m Air	
600411000L	Interconnecting Cables 70mm² 10m H2O	
6043500000	Mig Torch TMS 36 4m Air	
6006970000	Mig Torch TMS 503 3m H2O	
6345000000	Roller d.37 0,8-1,0 Carbon Steel	
6315900000	Roller d.37 1,0-1,2 Carbon Steel	**(included with the TOP 504 SM/XM)**
6345100000	Roller d.37 1,2-1,6 Carbon Steel	
6345300000	Roller d.37 1,2-1,6 Flux Cored	
6327200000	Roller d.37 1,6-2,4 Flux Cored	
6345200000	Roller d.37 1,0-1,2 Aluminum	
6350500000	Roller d.37 1,6-2,4 Aluminum	

MAX® 403S
TOP 504 SM

MIG
(GMAW)

MULTIFUN. | MOTOGEN. | CE CERT. | NORMATIVE | PFC | V.R.D.

MEMORY | REMOTE ROD PULSE | ARC FORCE | TIG LIFT | SLOPE DOWN | HOT START

3phase MIG/MAG Multivoltage PFC Inverter

ST-ARC™ — **NEW STEL INNOVATION**

Technical Data	MAX® 403S
Voltage Range	**200 V —> 575 V**
Main Voltage	230-400-460-500 V
Phase	1/3
Frequency	50/60 Hz
Real Current (35%)	24,5-12,5 A (16,5 - 400V)
Real Power (35%)	9,7 KVA (400V)
Power Factor	**0,98**
Efficency	87 %
No Load Voltage	70 V
Current Range	4-400 A (4-300A 1F)
Wire Feed Rollers	4
Welding Current 45% (25°C)	400 A
Welding Current 60% (25°C)	370 A
Welding Current 100% (25°C)	350 A
Welding Current 35% (40°C)	400 A
Welding Current 60% (40°C)	350 A
Welding Current 100% (40°C)	300 A (300A 1F)

Features	MAX® 403S
Earth Clamp - Cable/E.Holder	70 mm²
Degree of Protection	IP 23
Insulation Class	H
Work Temperature	40°C
Safety Approved	S
Length/Width/Height (mm)	1040x50x1430
Weight (Complete Combo H2O)	132 Kg

The date is measured at an environment temperature of 40 °C

Technical Data wirefeed 4 rollers		
Roll Diameter	37	• Rollers changing without tools
Material	Aluminum	• Robust
Motor	DC Motor perm. magnet	• 4 Roll Feed
Pressure Unit	2 (Front and Rear)	• 2 Pressure Unit
Power	100 W	• Encoder Regulation
Main Voltage	24 V / 42 V	• Wirefeed Made in Switzerland
Max. wire speed	20 m/min	
Euro Connector	Brass Hexagonal	

Materials	Welding Process	Environments	Main Features
• Mild Steels	• Electrode Welding	• Medium-Heavy Fabrications	• Inverter Technology
• Stainless Steels	• Cellulosic Electrodes (No Citoflex)	• Heavy Industries	• Multiprocess
• Aluminum and Alloys	• TIG Lift Start Welding	• Special Maintenance	• PFC Multi-Link™
• Nickel Steels and Alloys	• Mig/Mag Welding	• Petro-chemical	• Digital Display
		• Nuclear Plant	• V.R.D.
		• Military plant	• Arc-Force & Inductance Variable
		• Mining	• CC-CV

Main Accessories

TROLLEY MP
cod. 600343000L
The practical Trolley allows the movement of the Power Source in every condition of soil in safety and ease.

WATER COOLER AWC MPS
cod. 60147100L
Cooling System for TIG and MIG/MAG water torch.

MIG/MAG Torch
Mig/Mag professional Torch
- Mig Torch 503 4m H2O Cod. 6006980000

TOP 504 SM
cod. 600012001L
4 Rollers Wire Feeder for a professional welding.

Complete Combo H2O

Code	Description
600192000L	MAX® 403S
-	Wire Feed TOP 504 SM
-	Water Cooler AWC MPS
-	Water Cooler Plug MP for MAX® 403S
-	Trolley MP
-	Kit MIG for Trolley MP
-	Interconnecting Cables 70mm² 5m H2O
600066001L	Wheels Kit for Wire Feed
6006980000	Mig Torch TMS 503 4m H2O
6055900000	Gas Regulator 2 Gauges (Italian Gas Connection)
607010001L	Earth Cable 70mm² 3m with Clamp

Accessories

Code	Description	
600343000L	Trolley MP	
600367000L	Kit MIG for Trolley MP	
600066001L	Wheels Kit for Wire Feed	
601471000L	Water Cooler AWC MPS	
600388000L	Water Cooler AWC MP HD (High Performance)	
600362000L	Water Cooler Plug MP for MAX® 403	
600239000L	5L Tank Liquid STELFreeze	
600407000L	Interconnecting Cables 70mm² 5m Air	
600408000L	Interconnecting Cables 70mm² 5m H2O	
600409000L	Interconnecting Cables 70mm² 10m Air	
600411000L	Interconnecting Cables 70mm² 10m H2O	
6043500000	Mig Torch TMS 36 4m Air	
6006970000	Mig Torch TMS 503 3m H2O	
6345000000	Roller d.37 0,8-1,0 Carbon Steel	
6315900000	Roller d.37 1,0-1,2 Carbon Steel	**(included with the TOP 504 SM/XM)**
6345100000	Roller d.37 1,2-1,6 Carbon Steel	
6345300000	Roller d.37 1,2-1,6 Flux Cored	
6327200000	Roller d.37 1,6-2,4 Flux Cored	
6345200000	Roller d.37 1,0-1,2 Aluminum	
6350500000	Roller d.37 1,6-2,4 Aluminum	

MAX® 403S
TOP 504 XM

MIG
(GMAW)

MULTIFUN. | MOTOGEN. | CE CERT. | NORMATIVE | PFC | V.R.D.

MEMORY | REMOTE ROD PULSE | SYNERGIC | TIG LIFT | SLOPE DOWN | PULSE / DOUBLE PULSE

3phase SYNERGIC PULSE/DOUBLE PULSE MIG/MAG Multivoltage PFC Inverter

ST-ARC™ — **NEW STEL INNOVATION**

Synergic EASY WELD — SELECT THE WIRE & WELD!

PULSE
DOUBLE PULSE
MIG/MAG

EN 1090 WPQR APPROVED

Made in ITALY

Technical Data	MAX® 403S
Voltage Range	**200 V —> 575 V**
Main Voltage	230-400-460-500 V
Phase	1/3
Frequency	50/60 Hz
Real Current (35%)	24,5-12,5 A (16,5 - 400V)
Real Power (35%)	9,7 KVA (400V)
Power Factor	**0,98**
Efficency	87 %
No Load Voltage	70 V
Current Range	4-400 A (4-300A 1F)
Wire Feed Rollers	4
Welding Current 45% (25°C)	400 A
Welding Current 60% (25°C)	370 A
Welding Current 100% (25°C)	350 A
Welding Current 35% (40°C)	400 A
Welding Current 60% (40°C)	350 A
Welding Current 100% (40°C)	300 A (300A 1F)

Features	MAX® 403S
Earth Clamp - Cable/E.Holder	70 mm²
Degree of Protection	IP 23
Insulation Class	H
Work Temperature	40°C
Safety Approved	S
Length/Width/Height (mm)	1040x50x1430
Weight (Complete Combo H2O)	132 Kg

The date is measured at an environment temperature of 40 °C

Technical Data wirefeed 4 rollers		
Roll Diameter	37	• Rollers changing without tools
Material	Aluminum	• Robust
Motor	DC Motor perm. magnet	• 4 Roll Feed
Pressure Unit	2 (Front and Rear)	• 2 Pressure Unit
Power	100 W	• Encoder Regulation
Main Voltage	24 V / 42 V	• Wirefeed Made in Switzerland
Max. wire speed	20 m/min	
Euro Connector	Brass Hexagonal	

Materials
- Mild Steels
- Stainless Steels
- Aluminum and Alloys
- Nickel Steels and Alloys

Welding Process
- Electrode Welding
- Cellulosic Electrodes (No Citoflex)
- TIG Lift Start Welding
- Mig/Mag Welding
- Mig/Mag Pulse Welding

Environments
- Medium-Heavy Fabrications
- Heavy Industries
- Special Maintenance
- Petro-chemical
- Nuclear Plant
- Military plant
- Mining

Main Features
- Synergic
- Inverter Technology
- Multiprocess
- PFC Multi-Link™
- Digital Display
- V.R.D.
- Arc-Force & Inductance Variable
- CC-CV

Main Accessories

TROLLEY MP
cod. 600343000L
The practical Trolley allows the movement of the Power Source in every condition of soil in safety and ease.

WATER COOLER AWC MPS
cod. 601471000L
Cooling System for TIG and MIG/MAG water torch.

MIG/MAG Torch
Mig/Mag professional Torch
- Mig Torch 503 4m H2O Cod. 6006980000

TOP 504 XM
cod. 600014001L
4 Rollers Wire Feeder for a professional welding.

Complete Combo H2O

Code	Description
600193000L	MAX® 403S
-	Wire Feed TOP 504 XM
-	Water Cooler AWC MPS
-	Water Cooler Plug MP for MAX® 403S
-	Trolley MP
-	Kit MIG for Trolley MP
-	Interconnecting Cables 70mm² 5m H2O
600066001L	Wheels Kit for Wire Feed
6006980000	Mig Torch TMS 503 4m H2O
6055900000	Gas Regulator 2 Gauges (Italian Gas Connection)
607010001L	Earth Cable 70mm² 3m with Clamp

Accessories

Code	Description	
600343000L	Trolley MP	
600367000L	Kit MIG for Trolley MP	
600066001L	Wheels Kit for Wire Feed	
601471000L	Water Cooler AWC MPS	
600388000L	Water Cooler AWC MP HD (High Performance)	
600362000L	Water Cooler Plug MP for MAX® 403	
600239000L	5L Tank Liquid STELFreeze	
600407000L	Interconnecting Cables 70mm² 5m Air	
600408000L	Interconnecting Cables 70mm² 5m H2O	
600409000L	Interconnecting Cables 70mm² 10m Air	
600411000L	Interconnecting Cables 70mm² 10m H2O	
6043500000	Mig Torch TMS 36 4m Air	
6006970000	Mig Torch TMS 503 3m H2O	
6345000000	Roller d.37 0,8-1,0 Carbon Steel	
6315900000	Roller d.37 1,0-1,2 Carbon Steel	**(included with the TOP 504 SM/XM)**
6345100000	Roller d.37 1,2-1,6 Carbon Steel	
6345300000	Roller d.37 1,2-1,6 Flux Cored	
6327200000	Roller d.37 1,6-2,4 Flux Cored	
6345200000	Roller d.37 1,0-1,2 Aluminum	
6350500000	Roller d.37 1,6-2,4 Aluminum	

MAX® 503
TOP 504 SM

MIG
(GMAW)

MULTIFUN. | MOTOGEN. | CE CERT. | NORMATIVE 60974-10 60974-1 | V.R.D. SYSTEM | 60 SLOT MEMORY

REMOTE ROD PULSE | ARC FORCE | TIG LIFT | SLOPE DOWN | HOT START

3phase MIG/MAG Inverter

ST-ARC™

NEW STEL INNOVATION

EN 1090 WPQR APPROVED

Made in ITALY

Technical Data	MAX® 503
Main Voltage	400/500 V
Phase	3
Frequency	50/60 Hz
Real Current (40%)	24,3/19,5 A
Real Power (40%)	17/13,5 KVA
Power Factor	0,8
Efficency	90 %
No Load Voltage	20-80 V
Current Range	4-500 A
Wire Feed Rollers	4
Welding Current 45% (25°C)	500 A
Welding Current 100% (25°C)	400 A
Welding Current 40% (40°C)	500 A
Welding Current 60% (40°C)	440 A
Welding Current 100% (40°C)	380 A

Features	MAX® 503
Earth Clamp - Cable/E.Holder	70 mm²
Degree of Protection	IP 23
Insulation Class	H
Work Temperature	40°C
Safety Approved	S
Length/Width/Height (mm)	1040x50x1460
Weight (Complete Combo H2O)	151 Kg

The date is measured at an environment temperature of 40 °C

Technical Data wirefeed 4 rollers		
Roll Diameter	37	• Rollers changing without tools
Material	Aluminum	• Robust
Motor	DC Motor perm. magnet	• 4 Roll Feed
Pressure Unit	2 (Front and Rear)	• 2 Pressure Unit
Power	100 W	• Encoder Regulation
Main Voltage	24 V / 42 V	• Wirefeed Made in Switzerland
Max. wire speed	20 m/min	
Euro Connector	Brass Hexagonal	

Materials	Welding Process	Environments	Main Features
• Mild Steels	• Electrode Welding	• Heavy Industries	• Inverter Technology
• Stainless Steels	• Cellulosic Electrodes (No Citoflex)	• Special Maintenance	• Multiprocess
• Aluminum and Alloys	• TIG Lift Start Welding	• Petro-chemical	• Digital Display
• Nickel Steels and Alloys	• Mig/Mag Welding	• Nuclear Plant	• V.R.D.
		• Military plant	• Arc-Force & Inductance Variable
		• Mining	• Wave System Interconnecting Cables (Only for MAX® 503 OFF-SHORE)

Main Accessories

TROLLEY MP
cod. 600343000L
The practical Trolley allows the movement of the Power Source in every condition of soil in safety and ease.

WATER COOLER AWC MPS
cod. 601471000L
Cooling System for TIG and MIG/MAG water torch.

MIG/MAG Torch
Mig/Mag professional Torch
- Mig Torch 503 4m H2O Cod. 6006980000

TOP 504 SM
cod. 600012001L
4 Rollers Wire Feeder for a professional welding.

Complete Combo H2O

Code	Description
601299000L	MAX® 503
-	Wire Feed TOP 504 SM
-	Water Cooler AWC MPS
-	Water Cooler Plug MP for MAX® 503
-	Trolley MP
-	Kit MIG for Trolley MP
-	Interconnecting Cables 70mm² 5m H2O
600066001L	Wheels Kit for Wire Feed
6006980000	Mig Torch TMS 503 4m H2O
6055900000	Gas Regulator 2 Gauges (Italian Gas Connection)
607010001L	Earth Cable 70mm² 3m with Clamp

Accessories

Code	Description	
600343000L	Trolley MP	
600367000L	Kit MIG for Trolley MP	
600066001L	Wheels Kit for Wire Feed	
601471000L	Water Cooler AWC MPS	
600388000L	Water Cooler AWC MP HD (High Performance)	
600239000L	5L Tank Liquid STELFreeze	
604880000L	Water Cooler Plug MP for MAX® 503	
600387000L	Kit Adattatore AWC MP per MAX® 503	
600407000L	Interconnecting Cables 70mm² 5m Air	
600408000L	Interconnecting Cables 70mm² 5m H2O	
600409000L	Interconnecting Cables 70mm² 10m Air	
600411000L	Interconnecting Cables 70mm² 10m H2O	
6043500000	Mig Torch TMS 36 4m Air	
6006970000	Mig Torch TMS 503 3m H2O	
6345000000	Roller d.37 0,8-1,0 Carbon Steel	
6315900000	Roller d.37 1,0-1,2 Carbon Steel	**(included with the TOP 504 SM/XM)**
6345100000	Roller d.37 1,2-1,6 Carbon Steel	
6345300000	Roller d.37 1,2-1,6 Flux Cored	
6327200000	Roller d.37 1,6-2,4 Flux Cored	
6345200000	Roller d.37 1,0-1,2 Aluminum	
6350500000	Roller d.37 1,6-2,4 Aluminum	

Sky-Mig 353K

MIG
(GMAW)

MOTOGEN. CE CERT. NORMATIVE
60974-10
60974-1

3Phase Compact MIG/MAG - 10 Steps

Technical Data	Sky-Mig 353K
Main Voltage	380/415 V
Phase	3
Frequency	50/60 Hz
Real Current (20%)	8,5 A
Real Power (20%)	6 KVA
Power Factor	0,95
Efficency	83 %
No Load Voltage	17,6-36 V
Current Range	30-300 A
Steps	10
Wire Feed Rollers	2/4
Welding Current 20% (40°C)	300 A
Welding Current 60% (40°C)	200 A
Welding Current 100% (40°C)	150 A

Features	Sky-Mig 353K
Earth Cable	50 mm²
Degree of Protection	IP 23
Insulation Class	H
Work Temperature	40°C
Safety Approved	S
Length/Width/Height (mm)	960x380x820
Weight	85 Kg

The date is measured at an environment temperature of 40 °C

Technical Data wirefeed 2 rollers		
Roll Diameter	30	• Rollers changing without tools
Material	Fiber reinforced polyamide	• Robust
Motor	DC Motor perm. magnet	• 2 Roll Feed with
Pressure Unit	1 Central	(4 Roll Feed optional upgrade)
Power	50 W	• Encoder Regulation
Main Voltage	24 V / 42 V	• Wirefeed Made in Switzerland
Max. wire speed	19 m/min	
Euro Connector	Brass Hexagonal	

Materials	Welding Process	Environments	Main Features
• Mild Steels	• Mig/Mag Welding	• Light Fabrications	• Digital Display
• Stainless Steels		• Medium-Heavy Fabrications	• 4 Roll Feed (Optional)
• Castings		• Automotive Industries	• 2 T/ 4 T Mig/Mag Welding
• Aluminum and Alloys		• Ordinary Maintenance	• Compact
		• Workshops and Building	• Soft-Start (Soft,Medium,High)
		• Auto repair	• Burn-Back Regolabile
		• Working sheets	• Inching and Gas Purge.
			• Central Euro Torch Connector

Main Accessories

MIG/MAG Torch
Mig/Mag professional Torch
- Mig Torch 25 3m Air Cod. 6051500000

GAS REGULATOR 2 GAUGES
cod. 6055900000
Gas Regulator with 2 Gauges (Italian Gas Connection)

Rollers d. 30
Rollers for compact or separate Wire Feed.
- 0,8-1,0 Carbon Steel cod. 6316200000
- 0,9 Flux Cored cod. 6349800000

Only Power Source Air

Code	Description
600112000L	Sky-Mig 353K 2 Rulli
600113000L	Sky-Mig 353K 4 Rulli

Complete Combo Air 2 Rollers

Code	Description
600114000L	Sky-Mig 353K 2 Rulli
-	Earth Cable 50mm² 3m
-	Mig Torch TMS 25 3m Air
6055900000	Gas Regulator 2 Gauges (Italian Gas Connection)

Complete Combo Air 4 Rollers

Code	Description
600115000L	Sky-Mig 353K 4 Rulli
-	Earth Cable 50mm² 3m
-	Mig Torch TMS 25 3m Air
6055900000	Gas Regulator 2 Gauges (Italian Gas Connection)

Accessories

Code	Description	
602000001L	Earth Cable 50mm² 3m	
607010001L	Earth Cable 70mm² 3m with Clamp	
605150000L	Mig Torch TMS 25 3m Air	
6043500000	Mig Torch TMS 36 4m Air	
6055900000	Gas Regulator 2 Gauges (Italian Gas Connection)	
6316000000	Roller d.30 0,6-0,8 Carbon Steel	**(Only for Power Source 2 Rolles)**
6316200000	Roller d.30 0,8-1,0 Carbon Steel	**(Included with the Power Source 2 Rolles)**
6350700000	Roller d.37 0,8-1,0 Carbon Steel	**(Included with the Power Source 4 Rolles))**
6349800000	Roller d.30 0,9 Flux Cored	**(Only for Power Source 2 Rolles)**
6346400000	Roller d.30 1,0-1,2 Aluminum	**(Only for Power Source 2 Rolles)**

Sky-Mig 453K

MIG
(GMAW)

SYNERGIC | MOTOGEN. | CE CERT. | NORMATIVE
60974-10
60974-1

3Phase SYNERGIC Compact MIG/MAG - 30 Steps

Made in ITALY

Technical Data	Sky-Mig 453K
Main Voltage	380/415 V
Phase	3
Frequency	50/60 Hz
Real Current (35%)	15,3 A
Real Power (35%)	10,6 KVA
Power Factor	0,95
Efficency	75 %
No Load Voltage	17,3-47 V
Current Range	30-400 A
Steps	3x10
Wire Feed Rollers	4
Welding Current 20% (40°C)	400 A
Welding Current 35% (40°C)	350 A
Welding Current 60% (40°C)	250 A
Welding Current 100% (40°C)	200 A

Features	Sky-Mig 453K
Earth Cable	50 mm²
Degree of Protection	IP 23
Insulation Class	H
Work Temperature	40°C
Safety Approved	S
Length/Width/Height (mm)	960x380x820
Weight	105 Kg

The date is measured at an environment temperature of 40 °C

Technical Data wirefeed 4 rollers		
Roll Diameter	37	• Rollers changing without tools
Material	Fiber reinforced polyamide	• Robust
Motor	DC Motor perm. magnet	• 4 Roll Feed
Pressure Unit	1 Central	• Encoder Regulation
Power	100 W	• Wirefeed Made in Switzerland
Main Voltage	24 V / 42 V	
Max. wire speed	19 m/min	
Euro Connector	Brass Hexagonal	

Materials	Welding Process	Environments	Main Features
• Mild Steels	• Mig/Mag Welding	• Light Fabrications	• Synergic
• Stainless Steels		• Medium-Heavy Fabrications	• Digital Display
• Castings		• Automotive Industries	• 4 Roll Feed
• Aluminum and Alloys		• Ordinary Maintenance	• 2 T/ 4 T Mig/Mag Welding
		• Workshops and Building	• Compact
		• Auto repair	• Soft-Start (Soft,Medium,High)
		• Working sheets	• Burn-Back Regolabile
			• Inching and Gas Purge
			• Central Euro Torch Connector

Main Accessories

MIG/MAG Torch
Mig/Mag professional Torch
- Mig Torch 36 4m Air Cod. 6043500000

GAS REGULATOR 2 GAUGES
cod. 6055900000
Gas Regulator with 2 Gauges (Italian Gas Connection)

Rollers d. 37
Rollers for compact or separate Wire Feed.
- 0,8-1,0 Carbon Steel cod. 6350700000
- 1,0-1,2 Carbon Steel cod. 6360600000
- 1,2-1,6 Flux Cored cod. 6360800000

Complete Combo Air

Code	Description
600144000L	Sky-Mig 453K Air
602000001L	Earth Cable 50mm² 3m
6043500000	Mig Torch TMS 36 4m Air
6055900000	Gas Regulator 2 Gauges (Italian Gas Connection)

Complete Combo H2O

Code	Description
600146000L	Sky-Mig 453K H2O
600147000L	Water Cooler AWC MP Vertical
602000001L	Earth Cable 50mm² 3m
6006960000	Mig Torch TMS 302 4m H2O
6055900000	Gas Regulator 2 Gauges (Italian Gas Connection)

Accessories

Code	Description	
600147000L	Water Cooler AWC MP Vertical	**(Liquid not Included)**
600239000L	5L Tank Liquid STELFreeze	
600415000L	Water Cooler Setting Up Sky-Mig Air to Water KIT	**(Included with the H2O Combo)**
600437000l	Gas Cylinder Braket for Water Version KIT	**(Included with the H2O Combo)**
600443000L	Water Pipes KIT	**(Included with the H2O Combo)**
602000001L	Earth Cable 50mm² 3m	
607010001L	Earth Cable 70mm² 3m with Clamp	
6043500000	Mig Torch TMS 36 4m Air	
6006960000	Mig Torch TMS 302 4m H2O	
6055900000	Gas Regulator 2 Gauges (Italian Gas Connection)	
6350700000	Roller d.37 0,8-1,0 Carbon Steel	
6360600000	Roller d.37 1,0-1,2 Carbon Steel	**(Included with the Power Source)**
6361600000	Roller d.37 1,0-1,2 Flux Cored	
6360800000	Roller d.37 1,2-1,6 Flux Cored	
6360900000	Roller d.37 1,0-1,2 Aluminum	

Sky-Mig 353S

MIG
(GMAW)

MOTOGEN. CE CERT. NORMATIVE
60974-10
60974-1

3Phase Seperate MIG/MAG - 10 Steps

Made in ITALY

Technical Data	Sky-Mig 353S
Main Voltage	380/415 V
Phase	3
Frequency	50/60 Hz
Real Current (20%)	8,5 A
Real Power (20%)	6 KVA
Power Factor	0,95
Efficency	83 %
No Load Voltage	17,6-36 V
Current Range	30-300 A
Steps	10
Wire Feed Rollers	4
Welding Current 20% (40°C)	300 A
Welding Current 60% (40°C)	200 A
Welding Current 100% (40°C)	150 A

Features	Sky-Mig 353S
Earth Cable	50 mm²
Degree of Protection	IP 23
Insulation Class	H
Work Temperature	40°C
Safety Approved	S
Length/Width/Height (mm)	960x380x1370
Weight (Only Power Source Air)	102 Kg

The date is measured at an environment temperature of 40 °C

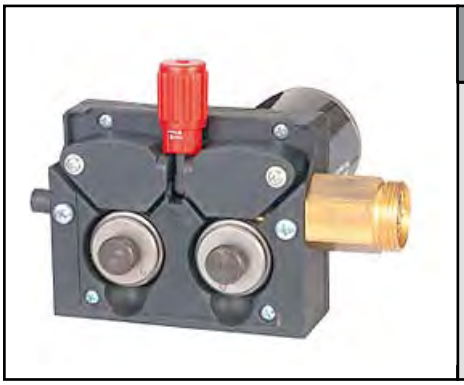

Technical Data wirefeed 4 rollers		
Roll Diameter	37	• Rollers changing without tools
Material	Fiber reinforced polyamide	• Robust
Motor	DC Motor perm. magnet	• 4 Roll Feed
Pressure Unit	1 Central	• Encoder Regulation
Power	100 W	• Wirefeed Made in Switzerland
Main Voltage	24 V / 42 V	
Max. wire speed	19 m/min	
Euro Connector	Brass Hexagonal	

Materials	Welding Process	Environments	Main Features
• Mild Steels	• Mig/Mag Welding	• Light Fabrications	• Digital Display
• Stainless Steels		• Medium-Heavy Fabrications	• 4 Roll Feed
• Castings		• Automotive Industries	• 2 T/ 4 T Mig/Mag Welding
• Aluminum and Alloys		• Ordinary Maintenance	• Separate Wire Feeder
		• Workshops and Building	• Soft-Start (Soft,Medium,High)
		• Auto repair	• Burn-Back Regolabile
		• Working sheets	• Inching and Gas Purge
			• Central Euro Torch Connector

Main Accessories

MIG/MAG Torch
Mig/Mag professional Torch
- Mig Torch 25 3m Air Cod. 6051500000

GAS REGULATOR 2 GAUGES
cod. 6055900000
Gas Regulator with 2 Gauges (Italian Gas Connection)

Rollers d. 37
Rollers for compact or separate Wire Feed.
- 0,8-1,0 Carbon Steel cod. 6350700000
- 1,0-1,2 Carbon Steel cod. 6360600000
- 1,2-1,6 Flux Cored cod. 6360800000

Only Power Source Air

Code	Description
600161000L	Sky-Mig 353S
-	Wire Feed TOP 304 TS Air
-	Interconnecting Cables 50mm² 2,5m Air

Complete Combo Air

Code	Description
600134000L	Sky-Mig 353S
-	Wire Feed TOP 304 TS Air
-	Interconnecting Cables 50mm² 2,5m Air
-	Earth Cable 50mm² 3m
-	Mig Torch TMS 25 3m Air
6055900000	Gas Regulator 2 Gauges (Italian Gas Connection)
600066001L	Wheels Kit for Wire Feed

Accessories

Code	Description	
601336000L	Wire Feed TOP 304 TS Air	
600066001L	Wheels Kit for Wire Feed	
602000001L	Earth Cable 50mm² 3m	
607010001L	Earth Cable 70mm² 3m with Clamp	
600416000L	Interconnecting Cables 50mm² 2,5m Air	
606490001L	Interconnecting Cables 70mm² 5m Air	
606500001L	Interconnecting Cables 70mm² 10m Air	
6051500000	Mig Torch TMS 25 3m Air	
6043500000	Mig Torch TMS 36 4m Air	
6350700000	Roller d.37 0,8-1,0 Carbon Steel	
6360600000	Roller d.37 1,0-1,2 Carbon Steel	**(Included with the Power Source)**
6361600000	Roller d.37 1,0-1,2 Flux Cored	
6360800000	Roller d.37 1,2-1,6 Flux Cored	
6360900000	Roller d.37 1,0-1,2 Aluminum	
6055900000	Gas Regulator 2 Gauges (Italian Gas Connection)	

Sky-Mig 453S

MIG
(GMAW)

MOTOGEN. CE CERT. NORMATIVE 60974-10 60974-1

3Phase Seperate MIG/MAG - 30 Steps

Made in ITALY

Technical Data	Sky-Mig 453S
Main Voltage	380/415 V
Phase	3
Frequency	50/60 Hz
Real Current (35%)	15,3 A
Real Power (35%)	10,6 KVA
Power Factor	0,95
Efficency	75 %
No Load Voltage	17,3-47 V
Current Range	30-400 A
Steps	3x10
Wire Feed Rollers	4
Welding Current 20% (40°C)	400 A
Welding Current 35% (40°C)	350 A
Welding Current 60% (40°C)	270 A
Welding Current 100% (40°C)	210 A

Features	Sky-Mig 453S
Earth Cable	50 mm²
Degree of Protection	IP 23
Insulation Class	H
Work Temperature	40°C
Safety Approved	S
Length/Width/Height (mm)	960x380x1370
Weight (Only Power Source Air)	128 Kg

The date is measured at an environment temperature of 40 °C

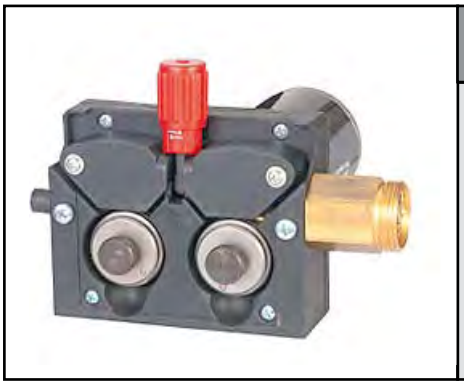

Technical Data wirefeed 4 rollers		
Roll Diameter	37	• Rollers changing without tools
Material	Fiber reinforced polyamide	• Robust
Motor	DC Motor perm. magnet	• 4 Roll Feed
Pressure Unit	1 Central	• Encoder Regulation
Power	100 W	• Wirefeed Made in Switzerland
Main Voltage	24 V / 42 V	
Max. wire speed	19 m/min	
Euro Connector	Brass Hexagonal	

Materials	Welding Process	Environments	Main Features
• Mild Steels	• Mig/Mag Welding	• Light Fabrications	• Digital Display
• Stainless Steels		• Medium-Heavy Fabrications	• 4 Roll Feed
• Castings		• Automotive Industries	• 2 T/ 4 T Mig/Mag Welding
• Aluminum and Alloys		• Ordinary Maintenance	• Separate Wire Feeder
		• Workshops and Building	• Soft-Start (Soft,Medium,High)
		• Auto repair	• Burn-Back Regolabile
		• Working sheets	• Inching and Gas Purge
			• Central Euro Torch Connector

Complete Combo Air

Code	Description	
600135000L	Sky-Mig 453S Air	
-	Wire Feed TOP 304 TS Air	
-	Interconnecting Cables 50mm² 2,5m Air	
602000001L	Earth Cable 50mm² 3m	
6043500000	Mig Torch TMS 36 4m Air	
6055900000	Gas Regulator 2 Gauges (Italian Gas Connection)	
600066001L	Wheels Kit for Wire Feed	

Complete Combo H2O

Code	Description	
600159000L	Sky-Mig 453S H2O	
-	Water Cooler AWC MP Vertical	**(Liquid not Included)**
-	Wire Feed TOP 304 TS H2O	
-	Interconnecting Cables 70mm² 5m H2O	
602000001L	Earth Cable 50mm² 3m	
6006960000	Mig Torch TMS 302 4m H2O	
6055900000	Gas Regulator 2 Gauges (Italian Gas Connection)	
600066001L	Wheels Kit for Wire Feed	

Accessories

Code	Description	
601336000L	Wire Feed TOP 304 TS Air	**(Included with the Air Combo)**
600148000L	Wire Feed TOP 304 TS H2O	**(Included with the H2O Combo)**
600417000L	Water Cooler Setting Up TOP 304 TS Air to Water	**(Included with the H2O Combo)**
600437000I	Gas Cylinder Braket for Water Version KIT	**(Included with the H2O Combo)**
600147000L	Water Cooler AWC MP Vertical	**(Liquid not Included)**
600239000L	5L Tank Liquid STELFreeze	
600066001L	Wheels Kit for Wire Feed	
602000001L	Earth Cable 50mm² 3m	
607010001L	Earth Cable 70mm² 3m with Clamp	
600416000L	Interconnecting Cables 50mm² 2,5m Air	
606490001L	Interconnecting Cables 70mm² 5m Air	
606500001L	Interconnecting Cables 70mm² 10m Air	
606520001L	Interconnecting Cables 70mm² 5m H20	
606530001L	Interconnecting Cables 70mm² 10m H20	
6043500000	Mig Torch TMS 36 4m Air	
6006960000	Mig Torch TMS 302 4m H2O	
6350700000	Roller d.37 0,8-1,0 Carbon Steel	
6360600000	Roller d.37 1,0-1,2 Carbon Steel	**(Included with the Power Source)**
6360900000	Roller d.37 1,0-1,2 Aluminum	
6345300000	Roller d.37 1,2-1,6 Flux Cored	
6055900000	Gas Regulator 2 Gauges (Italian Gas Connection)	

Sky-Mig 553S

MIG
(GMAW)

SYNERGIC | MOTOGEN. | CE CERT. | NORMATIVE 60974-10 60974-1

3Phase SYNERGIC Seperate MIG/MAG - 30 Steps

Made in ITALY

Technical Data	Sky-Mig 553S
Main Voltage	380/415 V
Phase	3
Frequency	50/60 Hz
Real Current (60%)	23,8 A
Real Power (60%)	16,5 KVA
Power Factor	0,95
Efficency	91 %
No Load Voltage	18,8-46,2 V
Current Range	30-500 A
Steps	3x10
Wire Feed Rollers	4
Welding Current 20% (40°C)	500 A
Welding Current 60% (40°C)	450 A
Welding Current 100% (40°C)	350 A

Features	Sky-Mig 553S
Earth Cable	70 mm²
Degree of Protection	IP 23
Insulation Class	H
Work Temperature	40°C
Safety Approved	S
Length/Width/Height (mm)	960x380x1370
Weight (Complete Combo H2O)	155 Kg

The date is measured at an environment temperature of 40 °C

Technical Data wirefeed 4 rollers		
Roll Diameter	37	• Rollers changing without tools
Material	Aluminum	• Robust
Motor	DC Motor perm. magnet	• 4 Roll Feed
Pressure Unit	2 (Front and Rear)	• 2 Pressure Unit
Power	100 W	• Encoder Regulation
Main Voltage	24 V / 42 V	• Wirefeed Made in Switzerland
Max. wire speed	20 m/min	
Euro Connector	Brass Hexagonal	

Materials	Welding Process	Environments	Main Features
• Mild Steels	• Mig/Mag Welding	• Medium-Heavy Fabrications	• Synergic
• Stainless Steels		• Automotive Industries	• Digital Display
• Castings		• Ordinary Maintenance	• 4 Roll Feed
• Aluminum and Alloys		• Workshops and Building	• 2 T/ 4 T Mig/Mag Welding
		• Auto repair	• Separate Wire Feeder
		• Working sheets	• Soft-Start (Soft,Medium,High)
			• Burn-Back Regolabile
			• Inching and Gas Purge
			• Central Euro Torch Connector

Main Accessories

MIG/MAG Torch
Mig/Mag professional Torch
- Mig Torch 503 4m H2O Cod. 6006980000

GAS REGULATOR 2 GAUGES
cod. 6055900000
Gas Regulator with 2 Gauges (Italian Gas Connection)

Rollers d. 37
Rollers for compact or separate Wire Feed.
- 0,8-1,0 Carbon Steel cod. 6345000000
- 1,0-1,2 Carbon Steel cod. 6315900000
- 1,2-1,6 Flux Cored cod. 6345300000

Complete Combo H2O

Code	Description	
600145000L	Sky-Mig 553S H20	
-	Water Cooler AWC MP Vertical	**(Liquid not Included)**
-	Wire Feed TOP 504 TS H20	
-	Interconnecting Cables 70mm² 5m H20	
607010001L	Earth Cable 70mm² 3m with Clamp	
6006980000	Mig Torch TMS 503 4m H20	
6055900000	Gas Regulator 2 Gauges (Italian Gas Connection)	
600066001L	Wheels Kit for Wire Feed	

Accessories

Code	Description	
600149000L	Wire Feed TOP 504 TS H20	**(Included with the Power Source)**
600147000L	Water Cooler AWC MP Vertical	**(Liquid not Included)**
600239000L	5L Tank Liquid STELFreeze	
600066001L	Wheels Kit for Wire Feed	
607010001L	Earth Cable 70mm² 3m with Clamp	
606520001L	Interconnecting Cables 70mm² 5m H20	
606530001L	Interconnecting Cables 70mm² 10m H20	
6006980000	Mig Torch TMS 503 4m H20	
6345000000	Roller d.37 0,8-1,0 Carbon Steel	
6315900000	Roller d.37 1,0-1,2 Carbon Steel	**(Included with the Power Source)**
6345200000	Roller d.37 1,0-1,2 Aluminum	
6345300000	Roller d.37 1,2-1,6 Flux Cored	
6055900000	Gas Regulator 2 Gauges (Italian Gas Connection)	

PLASMA CUTTING

STEL
WELDING DIVISION

www.stelgroup.it

INVERTER / INVERTER PFC RANGE

THOR 41K PFC

PLASMA CUTTING

TEST GAS | MOTOGEN. | SAFETY BUTTON | CE CERT. | NORMATIVE 61000-3-12 60974-10 60974-1 | PFC 61000-3-12

INCLUDED

Inverter 1Phase PFC Plasma Cutting

PFC Multi-Link™

WARRANTY YEARS 2

Made in ITALY

Technical Data	THOR 41K PFC
Voltage Range	**150 V —> 290 V**
Main Voltage	230 V
Phase	1
Frequency	50/60 Hz
Real Current (35%)	**9,5 A**
Real Power (35%)	2,2 KVA
Power Factor	**0,99**
Efficency	74 %
No Load Voltage	250 V
Current Range	15-30 A
Cutting Current 40% (25°C)	30 A
Cutting Current 100% (25°C)	27 A
Cutting Current 35% (40°C)	30 A
Cutting Current 60% (40°C)	26 A
Cutting Current 100% (40°C)	25 A

Features	THOR 41K PFC
Earth Cable	16 mm²
Degree of Protection	IP 23
Insulation Class	H
Work Temperature	40°C
Safety Approved	S
Length/Width/Height (mm)	580x190x405
Weight	23,8 Kg

The date is measured at an environment temperature of 40 °C

The technology “Check Consumables” warns the operator when consumables are ready for replacement, therefore avoiding damage to torch.

Due to the PFC feature,the Plasmacutter Thor 41K PFC can cut connected to any 1Phase plug world wide, working from 150 to 290 V without modifications. The Air Compressor incorporated with the Inverter makes cutting possible without the use of large external industrial compressors.

Portable and compact, the THOR 41K PFC can be utilized in various areas, site-work, buildings and plumbing, fabrication work-shops and car body repairs. Simple operating use, fast cutting speeds.

CUTTING THICKNESS

8mm Recommended Quality Cut (500mm/min)

10mm Quality Cut (250mm/min)

12mm Maximun Separation

PIERCE RATING OF 6mm

The declared cutting data are equal with internal or external compressor

Materials	Welding Process	Environments	Main Features
• Mild Steels	• Plasma Cutting	• Light Fabrications	• Inverter Technology
• Stainless Steels		• Special Maintenance	• Ease of operation
• Castings		• Ordinary Maintenance	• Test Gas
• Aluminum and Alloys		• Maintenance	• Reset
• Copper and Alloys		• Building and plumbing	• Incorporated Compressor
		• Electricians and installers	• Fireproof plastic
		• Workshops	• PFC
			• Consumables Check

Main Accessories

CIRCLE CUTTING KIT
cod.6083000000
Complete Circle Cutting attachment for HammerCut 40K.

Only Power Source with HammerCut 40K 4m

Code	Description	
600223000L	THOR 41 K PFC	
-	Earth Cable 16mm²	**(Included with the Power Source)**
-	HammerCut Torch 40K 4m	**(Included with the Power Source)**

Recommended Consumables

Code	Description	Pack/Pcs
601051000L	Medium Electrode	10
601052000L	Air Diffusor	2
601053000L	Medium Tip	10
601256000L	Shield Cup Body	4
600331000L	Stand off Guide	1

Accessories

Code	Description	
607790000L	Earth Cable 16mm²	**(Included with the Power Source)**
6002270000	HammerCut Torch 40K 4m	**(Included with the Power Source)**
6083000000	Circle Cutting KIT	

THOR 73 (3F)

PLASMA
CUTTING

TEST GAS | MOTOGEN. | SAFETY BUTTON | CE CERT. | NORMATIVE 60974-10 60974-1

Inverter 3Phase Plasma Cutting

Made in ITALY

Technical Data	THOR 73 (3F)
Main Voltage	380/415 V
Phase	3
Frequency	50/60 Hz
Real Current (60%)	11,3 A
Real Power (60%)	7,8 KVA
Power Factor	0,8
Efficency	83 %
No Load Voltage	320 V
Current Range	30-60 A
Cutting Current 60% (25°C)	-
Cutting Current 100% (25°C)	50 A
Cutting Current 60% (40°C)	60 A
Cutting Current 100% (40°C)	40 A

Features	THOR 73 (3F)
Earth Cable	16 mm²
Degree of Protection	IP 23
Insulation Class	H
Work Temperature	40°C
Safety Approved	S
Length/Width/Height (mm)	500x200x360
Weight	14 Kg

The date is measured at an environment temperature of 40 °C

The THOR range is composed of a series of INVERTER Power Sources for plasma cutting.

The "Reset" feature is a Safety function that automatically isolates the machine whilst changing consumables, therefore providing added protection to the operator. The Arc can not be ignited while "Reset" warning is activated.

CUTTING THICKNESS

18mm Recommended Quality Cut (500mm/min)

22mm Quality Cut (250mm/min)

25mm Maximun Separation

PIERCE RATING OF 12mm

Materials	Welding Process	Environments	Main Features
• Mild Steels	• Plasma Cutting	• Medium Fabrications	• Inverter Technology
• Stainless Steels		• Special Maintenance	• Ease of operation
• Castings		• Ordinary Maintenance	• Test Gas
• Aluminum and Alloys		• Maintenance	• Reset
• Copper and Alloys		• Building and plumbing	
		• Electricians and installers	
		• Workshops	

Main Accessories

CIRCLE CUTTING KIT
cod.6074800000
Complete Circle Cutting attachment for Plasma Torch.

INTERFACE KIT FOR AUTOMATIONS
Cod. 600467000L
Possibility to connect Thor Series to an automatic system with the interface kit.

Only Power Source with Torch 6m

Code	Description	
601273000L	THOR 73 3F	
-	Earth Cable 16mm²	**(Included with the Power Source)**
-	Plasma Torch SL60 6m	**(Included with the Power Source)**

Recommended Consumables

Code	Description	Pack/Pcs
607360000L	Electrode	5
607370000L	Start Cartridge	1
607390000L	Tip Cutting 60A	5
607410000L	Shield Cup Body Maximum Life	1
607420000L	Shield Cup Cutting 60A	1

Accessories

Code	Description	
600263000L	Earth Cable 16mm²	**(Included with the Power Source)**
600467000L	Automation KIT	
605600000L	Plasma Torch SL60 6m	**(Included with the Power Source)**
601233000L	Plasma Torch SL60 15m	
601416000L	Plasma Torch SL60 7,5m Automatic	
6074800000	Circle Cutting KIT	

THOR 123

PLASMA CUTTING

TEST GAS | MOTOGEN. | SAFETY BUTTON | CE CERT. | NORMATIVE 60974-10 60974-1

Inverter 3Phase Plasma Cutting

Made in ITALY

Technical Data	THOR 123
Main Voltage	380/415 V
Phase	3
Frequency	50/60 Hz
Real Current (20%)	13,5 A
Real Power (20%)	9 KVA
Power Factor	0,9
Efficency	87 %
No Load Voltage	270 V
Current Range	20-100 A
Cutting Current 60% (25°C)	85 A
Cutting Current 100% (25°C)	75 A
Cutting Current 20% (40°C)	100 A
Cutting Current 60% (40°C)	75 A
Cutting Current 100% (40°C)	65 A

Features	THOR 123
Earth Cable	16mm²
Degree of Protection	IP 23
Insulation Class	H
Work Temperature	40°C
Safety Approved	S
Length/Width/Height (mm)	495x280x720
Weight	46 Kg

The date is measured at an environment temperature of 40 °C

The THOR range is composed of a series of INVERTER Power Sources for plasma cutting.

The "Reset" feature is a Safety function that automatically isolates the machine whilst changing consumables, therefore providing added protection to the operator. The Arc can not be ignited while "Reset" warning is activated.

CUTTING THICKNESS

25mm Recommended Quality Cut (500mm/min)

30mm Quality Cut (250mm/min)

40mm Maximun Separation

PIERCE RATING OF 15mm

Materials	Welding Process	Environments	Main Features
• Mild Steels	• Plasma Cutting	• Medium & Heavy Fabrications	• Inverter Technology
• Stainless Steels		• Special Maintenance	• Ease of operation
• Castings		• Ordinary Maintenance	• Test Gas
• Aluminum and Alloys		• Maintenance	• Reset
• Copper and Alloys		• Building and plumbing	
		• Electricians and installers	
		• Workshops	

Main Accessories

Plasma Torch 100 Automatic
cod.60045100L
- Rubber Cable7,5m
- Long Life Consumables

INTERFACE KIT FOR AUTOMATIONS
Possibility to connect Thor Series to an automatic system with the interface kit.

ROLL BAR (Standard Version)
cod.600045000L
Built to protect the life of the Power Source and for ease of carrying or loading the PLASMA THOR 123 onto any surface.

TROLLEY KIT XP
cod. 601473000L
The practical Trolley allows the movement of the Power Source in every condition of soil in safety and ease.

Only Power Source with Torch 6m

Code	Description	
600404000L	THOR 123	
-	Earth Cable 16mm²	**(Included with the Power Source)**
-	Plasma Torch SL100 6m	**(Included with the Power Source)**
601473000L	Trolley XP	

Recommended Consumables

Code	Description	Pack/Pcs
607360000L	Electrode	5
6073700000	Start Cartridge	1
607400000L	Tip Cutting 100A	5
607410000L	Shield Cup Body Maximum Life	1
607430000L	Shield Cup Cutting 100A	1

Accessories

Code	Description	
601473000L	Trolley XP	
600455000L	Automation KIT	
600444000L	Earth Cable 16mm²	**(Included with the Power Source)**
600445000L	Plasma Torch SL100 6m	**(Included with the Power Source)**
601234000L	Plasma Torch SL100 15m	
600451000L	Plasma Torch SL100 7,5m Automatic	
6074800000	Circle Cutting KIT	
600045000L	Roll Bar KIT	

PLASMA
CUTTING

HAMMERCUT 40K
THOR 41K

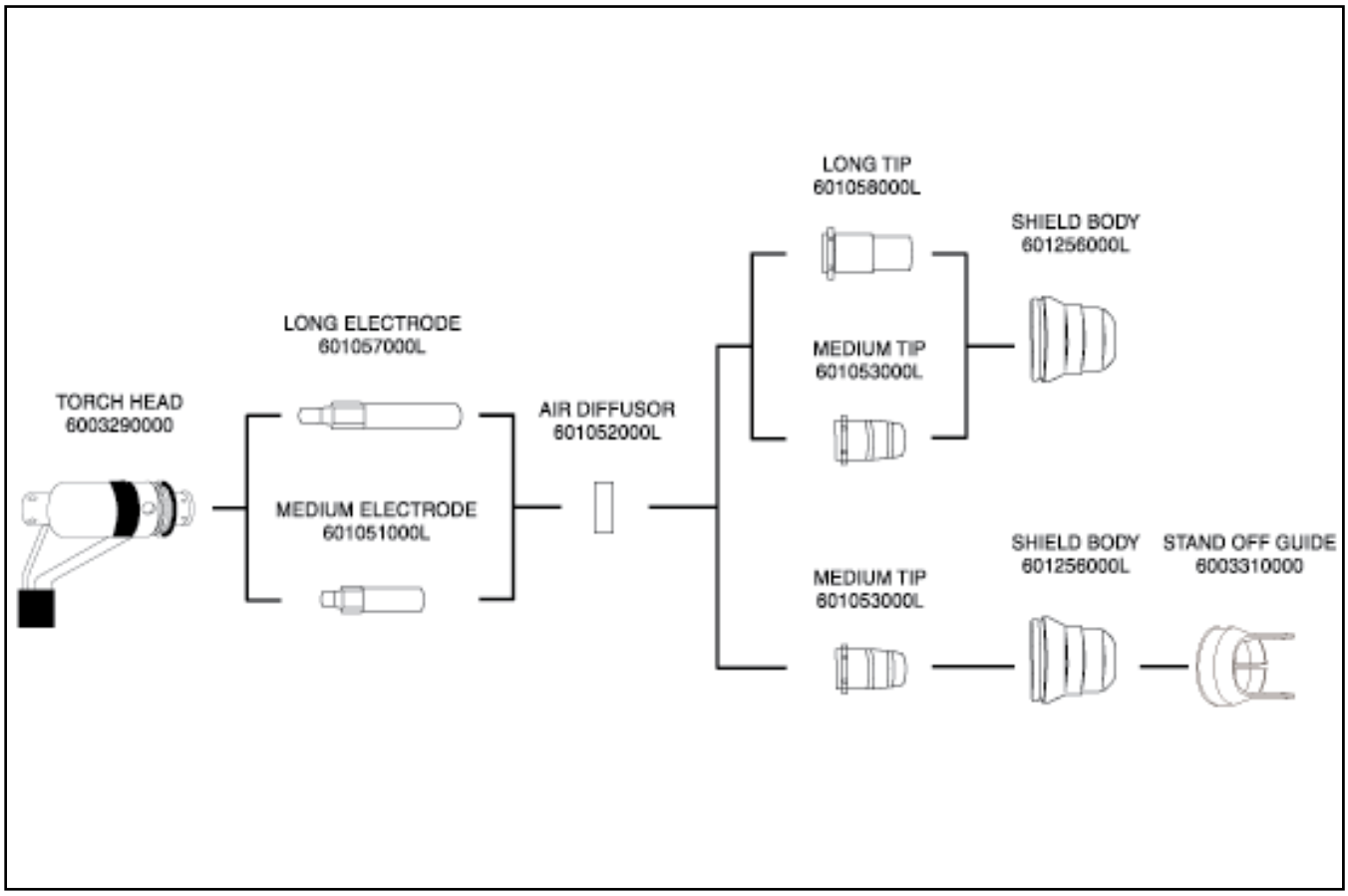

Consumables HAMMERCUT 40K

Code	Description	Pack/Pcs
601058000L	Long Tip 30A	10
601053000L	Medium Tip 30A	10
601057000L	Long Electrode	10
601051000L	Medium Electrode	10
601256000L	External Shield Body	4
600331000L	Stand Off Guide	1
601052000L	Air Diffusor	2
6003290000	Torch Head	1

SL60-100
THOR 41-73-123

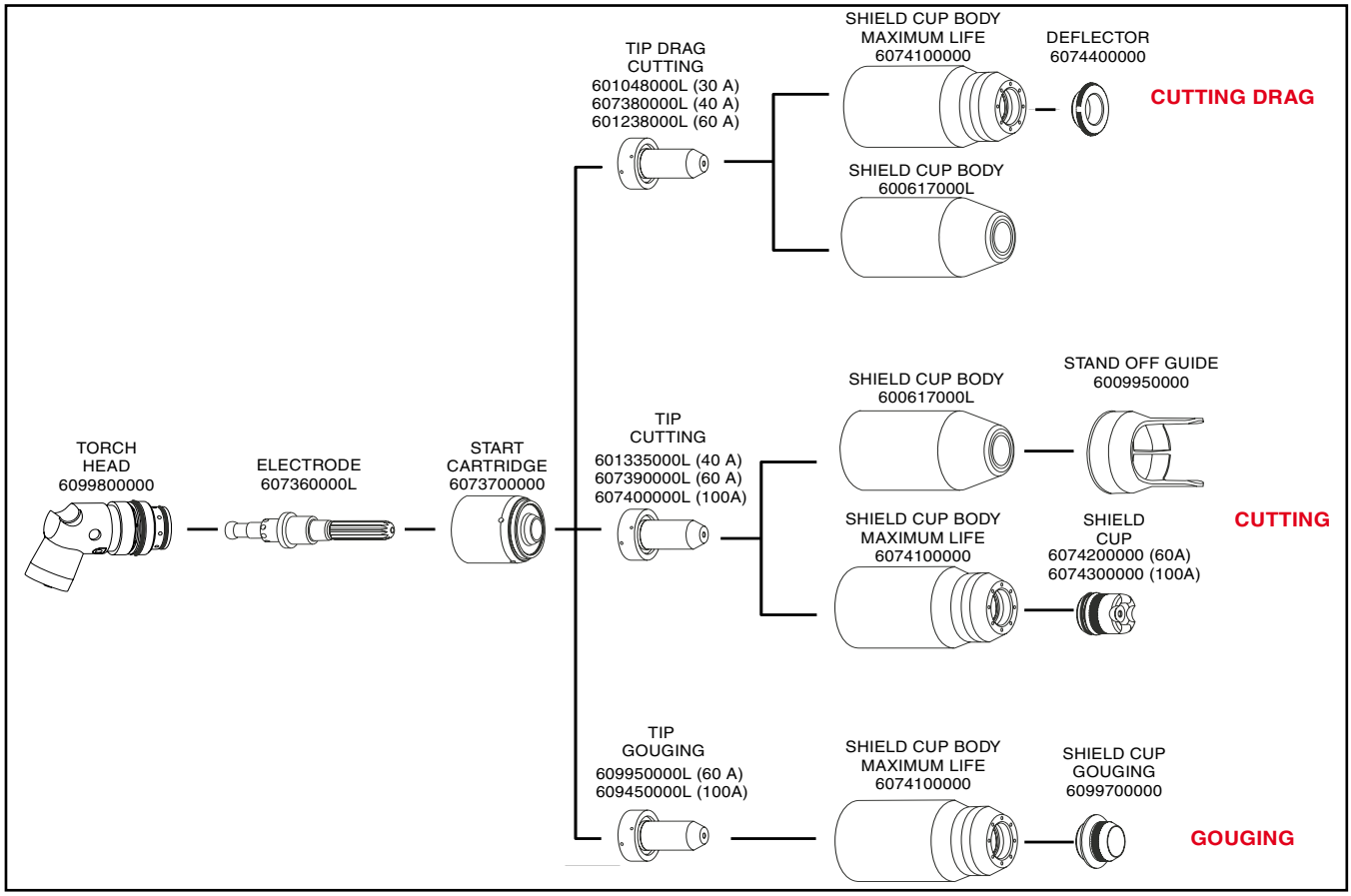

Consumables SL60/SL100

Code	Description		Pack/Pcs
601048000L	Tip Cutting Drag 30A	9-8206	5
607380000L	Tip Cutting Drag 40A	9-8207	5
601238000L	Tip Cutting Drag 60A	9-8252	5
601335000L	Tip Cutting 40A	9-8208	5
607390000L	Tip Cutting 60A	9-8210	5
607400000L	Tip Cutting 100A	9-8212	5
609950000L	Tip Cutting Gouging 60A	9-8226	5
609450000L	Tip Cutting Gouging 100A	9-8228	5
607360000L	Electrode	9-8215	5
607410000L	Shield Cup Body Maximum Life	9-8237	1
600617000L	Shield Cup Body	9-8218	1
607420000L	Shield Cup Cutting 60A	9-8235	1
607430000L	Shield Cup Cutting 100A	9-8236	1
609970000L	Shield Cup Gouging	9-8241	1
600995000L	Stand off Guide	9-8281	1
607440000L	Deflector	9-8243	1
607370000L	Start Cartridge	9-8213	1
6099800000	Torch Head	9-8219	1
605600000L	Torch 6m SL60	7-5253	1
600445000L	Torch 6m SL100	7-5254	1

MULTI PROCESS

STEL
WELDING DIVISION

www.stelgroup.it

INVERTER / INVERTER PFC RANGE

SERIE MULTI

MULTI PROCESS

Inverter Multiprocess

Made in ITALY

IRON-MIG
300-303P / 303 PFC-303P PFC

MAX® 403-403S
CC/CV

MAX® 503

Technical Data	Iron-Mig 303-303P / 303-303P PFC	MAX® 403 CC/CV	MAX® 403S CC/CV	MAX® 503
Main Voltage	230-400-460-500 V (400V x 303-303P)	400 V	230-400-460-500 V	400/500 V
Phase	1/3 (3 x 303-303P)	3	3	3
Frequency	50/60 Hz	50/60 Hz	50/60 Hz	50/60 Hz
Real Current (35%)	TBD	19 A	24,5-12,5 A (16,5 - 400V)	24,3/19,5 A
Real Power (35%)	TBD	11,2 KVA	9,7 KVA (400V)	17/13,5 KVA
Power Factor	TBD	0,85	**0,98**	0,8
Efficency	TBD	85 %	87 %	90 %
No Load Voltage	TBD	70 V	70 V	20-80 V
Current Range	15-300 A	4-400 A	4-400 A	4-500 A
Welding Current 35% (40°C)	TBD	400 A	400 A	500 A
Welding Current 60% (40°C)	TBD	350 A	350 A	440 A
Welding Current 100% (40°C)	TBD	300 A	300 A	380 A

Features	Iron-Mig 303-303P / 303-303P PFC	MAX® 403 CC/CV	MAX® 403S CC/CV	MAX® 503
Degree of Protection	IP 23	IP 23	IP 23	IP 23
Work Temperature	40°C	40°C	40°C	40°C
Length/Width/Height (mm)	680x300x435	460x250x600	460x250x600	610x300x530
Weight	42 Kg	32 Kg	40 Kg	50 Kg

The date is measured at an environment temperature of 40 °C

Accessories

TOP 504 SM
cod. 600012001L
4 Rollers Wire Feeder for a professional welding.

TOP 504 XM
cod. 600014001L
4 Rollers Wire Feeder for a professional welding. Synergic and Pulse/Double Pulse.

SUITCASE CC/CV
cod. 601312000L
MAX® Series can operate together with many different Industrial Suitcase Wire Feeders.

BOX TIG T.R.U. 500
cod. 600009000L
With the BOX TIG the MAX® Series became a TIG DC of 400/500Amps.

Only Power Source

Code	Description
601435000L	Iron-Mig 303
601429000L	Iron-Mig 303P
601437000L	Iron-Mig 303 PFC
601432000L	Iron-Mig 303P PFC
600243000L	MAX® 403
601282000L	MAX® 403S
600002000L	MAX® 503

Accessories

Code	Description	
600009000L	Box TIG T.R.U. 500	
600012001L	Wire Feed TOP 504 SM	
600014001L	Wire Feed TOP 504 XM	
600343000L	Trolley MP	
601473000L	Trolley XP	
600367000L	Kit MIG for Trolley MP	
601302000L	Kit TIG per Trolley MP	
600066001L	Wheels Kit for Wire Feed	
601471000L	Water Cooler AWC MPS	
600388000L	Water Cooler AWC MP HD (High Performance)	
601473000L	Water Cooler AWC MPX	**(Only for Iron-Mig 303 Series)**
600362000L	Water Cooler Plug MP for MAX® 403	
604880000L	Water Cooler Plug MP for MAX® 503	
600387000L	Water Cooler Plug adaptor for Awc MP for MAX® 503	
600015000L	Remote Control RCCS	
600026000L	Cable for Remote Control RCCS 10m	
600027000L	Cable for Remote Control RCCS 20m	
600028000L	Cable for Remote Control RCCS 30m	
600407000L	Interconnecting Cables 70mm² 5m Air	
600408000L	Interconnecting Cables 70mm² 5m H20	
600409000L	Interconnecting Cables 70mm² 10m Air	
600411000L	Interconnecting Cables 70mm² 10m H20	
600037001L	Welding Connection Cable 5m T.R.U.	
600038000L	Welding Connection Cable 10m T.R.U.	
6043500000	Mig Torch TMS 36 4m Air	
6006970000	Mig Torch TMS 503 3m H20	
600974000L	Tig Torch TTS 26 4m Air + 3 Ways Plug	
605060000L	Tig Torch TTS 18 4m H20 + 3 Ways Plug	
600975000L	Tig Torch TTS 26 8m Air + 3 Ways Plug	
600976000L	Tig Torch TTS 18 8m H20 + 3 Ways Plug	
6345000000	Roller d.37 0,8-1,0 Carbon Steel	
6315900000	Roller d.37 1,0-1,2 Carbon Steel	**(included with the TOP 504 SM/XM)**
6345100000	Roller d.37 1,2-1,6 Carbon Steel	
6345300000	Roller d.37 1,2-1,6 Flux Cored	
6327200000	Roller d.37 1,6-2,4 Flux Cored	
6345200000	Roller d.37 1,0-1,2 Aluminum	
6350500000	Roller d.37 1,6-2,4 Aluminum	

MARINE (OFF-SHORE)

STEL
WELDING DIVISION

www.stelgroup.it

INVERTER / INVERTER PFC RANGE

MARINE (OFF-SHORE)

Inverter Multiprocess

Made in ITALY

MAX® 403
NAVY CC-CV

MAX® 403S
NAVY CC-CV

MAX® 503
NAVY CC-CV

Technical Data	MAX® 403 NAVY	MAX® 403S NAVY	MAX® 503 NAVY
Main Voltage	400 V	230-400-460-500 V	400/500 V
Phase	3	3	3
Frequency	50/60 Hz	50/60 Hz	50/60 Hz
Real Current (35%)	19 A	24,5-12,5 A (16,5 - 400V)	24,3/19,5 A
Real Power (35%)	11,2 KVA	9,7 KVA (400V)	17/13,5 KVA
Power Factor	0,85	**0,98**	0,8
Efficency	86 %	87 %	90 %
No Load Voltage	70 V	70 V	20-80 V
Current Range	4-400 A	4-400 A	4-500 A
Welding Current 35% (40°C)	400 A	400 A	500 A
Welding Current 60% (40°C)	350 A	350 A	440 A
Welding Current 100% (40°C)	300 A	300 A	380 A

Features	MAX® 403 NAVY	MAX® 403S NAVY	MAX® 503 NAVY
Degree of Protection	IP 23	IP 23	IP 23
Work Temperature	40°C	40°C	40°C
Length/Width/Height (mm)	460x250x600	460x250x600	610x300x530
Weight	32 Kg	40 Kg	50 Kg

The date is measured at an environment temperature of 40 °C

Only Power Source

Code	Description
601419000L	MAX® 403 NAVY
TBA	MAX® 403S NAVY
TBA	MAX® 503 NAVY

Mig Inverter & Suitcase CC-CV

- 14 Ways Mono Cable
- 100m Extensions Cables
- Wire Speed control from remote
- Electrovalve control from remote

* Compatible with all wire feed available around the world

Accessories

Code	Description
601421000L	SuitCase Navy 5 - 5Kg
601439000L	SuitCase Navy 15 - 15Kg
601438000L	SuitCase Navy 5 - 5Kg (With Display + MMA Mode)
601441000L	SuitCase Navy 15 - 15Kg (With Display + MMA Mode)
601442000L	Interconnecting Cables 50mm² 30m COAXIAL CABLE
601443000L	Interconnecting Cables 50mm² 40m COAXIAL CABLE
601422000L	Interconnecting Cables 50mm² 50m COAXIAL CABLE
601444000L	Interconnecting Cables 70mm² 30m COAXIAL CABLE
601445000L	Interconnecting Cables 70mm² 40m COAXIAL CABLE
601446000L	Interconnecting Cables 70mm² 50m COAXIAL CABLE

Pulse Inverter Mig & TOP 504 XM ALU

- Pulse Aluminum
- 14 Ways Mono Cable
- 30m Extensions Cables

Complete Combo H2O

Code	Description
TBA	MAX® 403 ALU
-	Wire Feed TOP 504 XM
-	Interconnecting Cables 70mm² 30m H2O (Standard NO COAXIAL)
-	Water Cooler AWC MP HD
-	Water Cooler Plug MP for MAX® 403
-	Trolley MP
-	Kit MIG for Trolley MP

MINING

www.stelgroup.it

INVERTER / INVERTER PFC RANGE

UNDERGROUND

Inverter Multiprocess

Made in ITALY

MAX® 171 PFC
ATX IP54

MAX® 503
ATX IP54 / OFF-SHORE

THOR 93
ATX IP54

Technical Data	MAX®171 PFC ATX IP54	MAX®503 ATX IP54	THOR 93 ATX IP54
Main Voltage	90/290 V	400/500 V	400/500 V
Phase	1	3	3
Frequency	50/60 Hz	50/60 Hz	50/60 Hz
Real Current (35%)	11 A / *10 A (with 140 A@25%)	24,3/19,5 A	13,5 A
Real Power (35%)	2,5 KVA	17/13,5 KVA	9 KVA
Power Factor	0,99	0,8	90 %
No Load Voltage	20 V	20-80 V	270 V
Current Range	5-150 A	4-500 A	20-85 A
Welding Current 35% (40°C)	150 A (25%)	500 A	-
Welding Current 60% (40°C)	120 A	440 A	85 A
Welding Current 100% (40°C)	95 A	380 A	50 A

Features	MAX®171 PFC ATX IP54	MAX®503 ATX IP54	THOR 93 ATX IP54
Degree of Protection	IP 54	IP 54	IP 44/54
Length/Width/Height (mm)	400x170x300	610x300x530	460x250x600
Weight	13,5 Kg	54 Kg	50 Kg

The date is measured at an environment temperature of 40 °C

Only Power Source

Code	Description
600216000L	MAX®171 PFC ATX IP54
609420000L	MAX®503 ATX IP54
600414000L	THOR 93 ATX IP54 with Torch SL100

OFF-Shore System 20m Intercon. Cables Air

Code	Description
609420000L	MAX®503 ATX IP54 OFF-SHORE
600022000L	Wire-Feeder TOP 504 OFF-SHORE
600126000L	Extension 5m Wire Feeder Connection
600125000L	Extension 5m Power Source Connection
601071000L	Extension 10m

OPEN-MINES

MAX® 403
MAX 403S

MAX® 503

SKY-MIG 553S

THOR 123

Technical Data	MAX® 403	MAX® 403S	MAX® 503	Sky-Mig 553S	THOR 123
Main Voltage	400 V	230-400-460-500 V	400/500 V	380/415 V	380/415 V
Phase	3	3	3	3	3
Frequency	50/60 Hz	50/60 Hz	50/60 Hz	50/60 Hz	50/60 Hz
Real Current (35%)	19 A	24,5-12,5 A (16,5 - 400V)	24,3/19,5 A	23,8 A	13,5 A
Real Power (35%)	11,2 KVA	9,7 KVA (400V)	17/13,5 KVA	16,5 KVA	9 KVA
Power Factor	0,85	**0,98**	0,8	0,95	0,9
Efficency	86 %	87 %	90 %	91 %	87 %
No Load Voltage	70 V	70 V	20-80 V	18,8-46,2 V	270 V
Current Range	4-400 A	4-400 A	4-500 A	30-500 A	20-100 A
Welding Current 35% (40°C)	400 A	400 A	500 A	500 A (20%)	100 A (20%)
Welding Current 60% (40°C)	350 A	350 A	440 A	440 A	75 A
Welding Current 100% (40°C)	300 A	300 A	380 A	380 A	65 A

Features	MAX® 403	MAX® 403S	MAX® 503	Sky-Mig 553S	THOR 123
Degree of Protection	IP 23	IP 23	IP 23	IP 23	IP 23
Work Temperature	40°C	40°C	40°C	40°C	40°C
Length/Width/Height (mm)	460x250x600	460x250x600	610x300x530	960x380x1370	495x280x720
Weight	32 Kg	40 Kg	50 Kg	155 Kg	46 Kg

The date is measured at an environment temperature of 40 °C

Only Power Source

Code	Description
600243000L	MAX® 403
601282000L	MAX® 403S
600002000L	MAX® 503
600145000L	Sky-Mig 553S H2O Combo
600404000L	THOR 123 with Torch SL100

ACCESSORIES

STEL
WELDING DIVISION

www.stelgroup.it

ACCESSORIES

Mig Torch 15/25/36 150/290/340A Air

MIG
(GMAW)

The torch for Mig / Mag Welding is used when high productivity is required and a suitable flexibility of use. With this technology you can weld steel is austenitic and ferritic alloys of light metals (Al and Mg), copper alloys, nickel alloys and titanium alloys.

Technical Data	TMS 15	TMS 25	TMS 36
V Class	L	L	L
I2 max (Co2)	150	290	340
I2 max (Misc.)	100	260	220
V (Ac or Dc)	DC	DC	DC
ø Wire	0,6-0,8 mm	0,8-1,2 mm	0,8-1,2 mm
Gas	8-12 l/1'	10-20 l/1'	10-20 l/1'
Cooling	Air	Air	Air

TMS 15

Code	Description
6061000000	Mig Torch TMS 15 3m Air

TMS 25

Code	Description
6051500000	Mig Torch TMS 25 3m Air

TMS 36

Code	Description
6043500000	Mig Torch TMS 36 4m Air

Exploded View and Spare Parts

Spare Parts and Consumables TMS 15/25

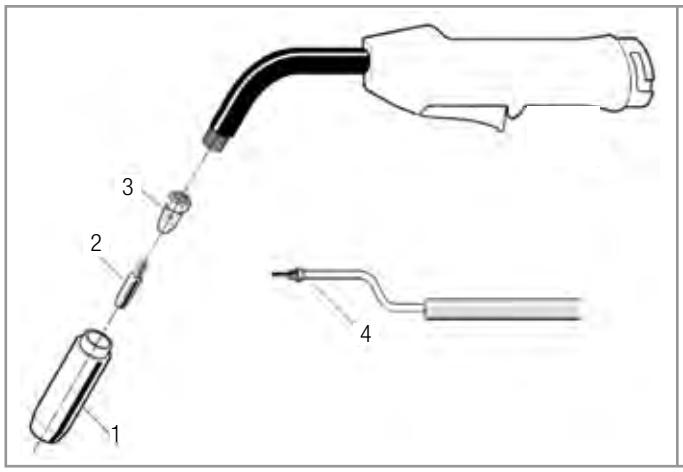

Spare Parts and Consumables TMS 36

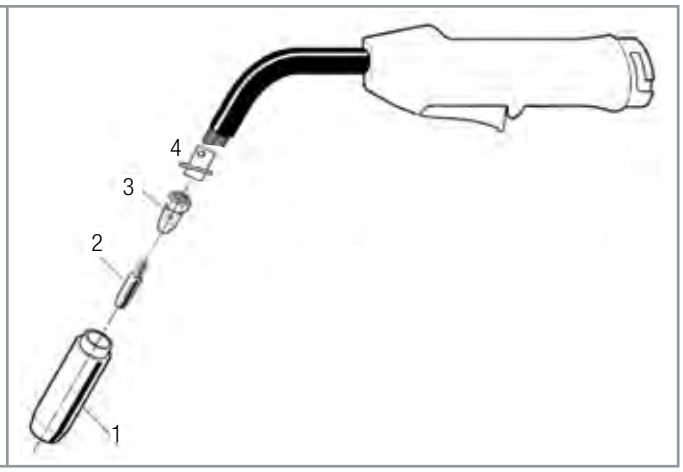

Spare Parts and Consumables TMS 15

Code	Description	Position	Pack/Pcs
6341400000	Driving gas Nozzle	1	5
634110000L	Contact Tip ø 0,6Cu	2	25
634120000L	Contact Tip ø 0,8Cu	2	25
631570000L	Contact Tip ø 1,0Cu	2	25
6346500000	Gas diffuser	3	5
6086900000	Liner ø 0,6-0,8mm	4	1

Spare Parts and Consumables TMS 25

Code	Description	Position	Pack/Pcs
6066400000	Driving gas Nozzle	1	10
631560000L	Contact Tip ø 0,8Cu	2	20
631570000L	Contact Tip ø 1,0Cu	2	20
600491000L	Contact Tip ø 0,8Cu-Cr-Zr (Recommended for Pulse Mode)	2	20
600489000L	Contact Tip ø 1,0Cu-Cr-Zr (Recommended for Pulse Mode)	2	20
6066500000	Gas diffuser	3	1

Spare Parts and Consumables TMS 36

Code	Description	Position	Pack/Pcs
6312400000	Driving gas Nozzle	1	1
631560000L	Contact Tip ø 0,8Cu	2	25
631570000L	Contact Tip ø 1,0Cu	2	25
631640000L	Contact Tip ø 1,2Cu	2	25
6617200000	Gas diffuser	3	1
6313400000	White Tube Holder	4	1

Mig Torch 302 300A H2O

MIG
(GMAW)

The torch for Mig / Mag Welding is used when high productivity is required and a suitable flexibility of use. With this technology you can weld steel is austenitic and ferritic alloys of light metals (Al and Mg), copper alloys, nickel alloys and titanium alloys.

Technical Data	TMS 302
V Class	L
I2 max (Co2)	300
I2 max (Misc.)	250
V (Ac or Dc)	DC
ø Wire	0,8-1,2 mm
Gas	10-25 l/1'
Cooling	H2O
T°C (H2O)	30° C
Q Min (H2O)	1,2 l/1'
P Min (H2O)	3 bar
P Max (H2O)	10 bar

TMS 302

Code	Description
6006950000	Mig Torch TMS 302 3m H20
6006960000	Mig Torch TMS 302 4m H20

Exploded View and Spare Parts

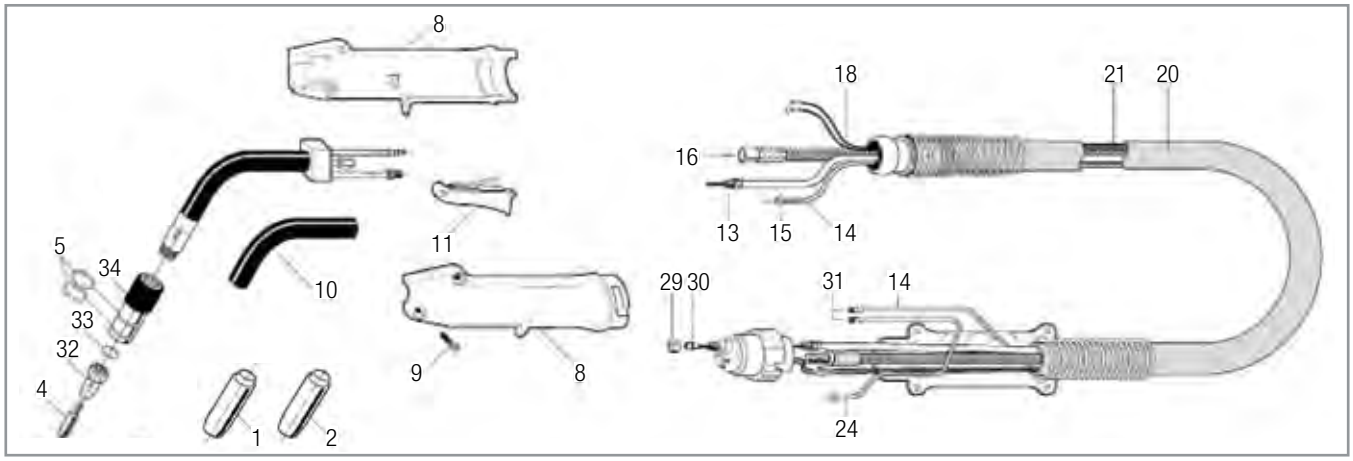

Spare Parts and Consumables

Code	Description	Position	Pack/Pcs
600937000L	Driving gas Nozzle ø i. 15	1	10
600941000L	Driving gas Tapared Nozzle ø i. 12	2	10
605750000L	Contact Tip ø 1,0Cu	4	25
605760000L	Contact Tip ø 1,2Cu	4	25
600878000L	Contact Tip ø 1,0Cu-Cr	4	25
600881000L	Contact Tip ø 1,2Cu-Cr	4	25
600753000L	O-Ring	5	20
6008180000	Handle	8	1
600946000L	Screws for Handle	9	50
6008230000	Heat Shrink	10	1
600874000L	Complete Buttom with Switch	11	5
6008650000	Liner support m.3	13	1
6008670000	Liner support m.4	13	1
6009010000	Water Hose (m)	14	-
600756000L	Water Hose Clamp ø 9,5	15	20
6007720000	Power Cable m.3	16	1
6007730000	Power Cable m.4	16	1
6007620000	Comand Cable (m)	18	-
6009060000	Canvas Cover (m)	20	-
6007950000	Interconnecting Cable m.3	21	1
6007970000	Interconnecting Cable m.4	21	1
6009070000	Water return Hose	24	-
600789000L	Liner nut locks	29	10
6008040000	Liner m.3 for wire ø 1,0/1,2	30	1
6008110000	Liner m.4 for wire ø 1,0/1,2	30	1
6008060000	Liner m.4 for wire Al. Ø 0,8/1,0 Carbon	30	1
6008070000	Liner m.4 for wire Al. Ø 1,2/1,6 Carbon	30	1
600888000L	Water hose Nipple	31	10
600793000L	Gas diffuser	32	5
600891000L	Insulating Washer	33	10
6008690000	Nozzle support	34	1

Mig Torch 503 500A H2O

MIG
(GMAW)

The torch for Mig / Mag Welding is used when high productivity is required and a suitable flexibility of use. With this technology you can weld steel is austenitic and ferritic alloys of light metals (Al and Mg), copper alloys, nickel alloys and titanium alloys.

Technical Data	TMS 503
V Class	L
I2 max (Co2)	500
I2 max (Misc.)	450
V (Ac or Dc)	DC
ø Wire	1,0-2,0 mm
Gas	10-25 l/1'
Cooling	H2O
T°C (H2O)	30° C
Q Min (H2O)	1,5 l/1'
P Min (H2O)	3 bar
P Max (H2O)	10 bar

TMS 503

Code	Description
6006970000	Mig Torch TMS 503 3m H20
6006980000	Mig Torch TMS 503 4m H20

Exploded View and Spare Parts

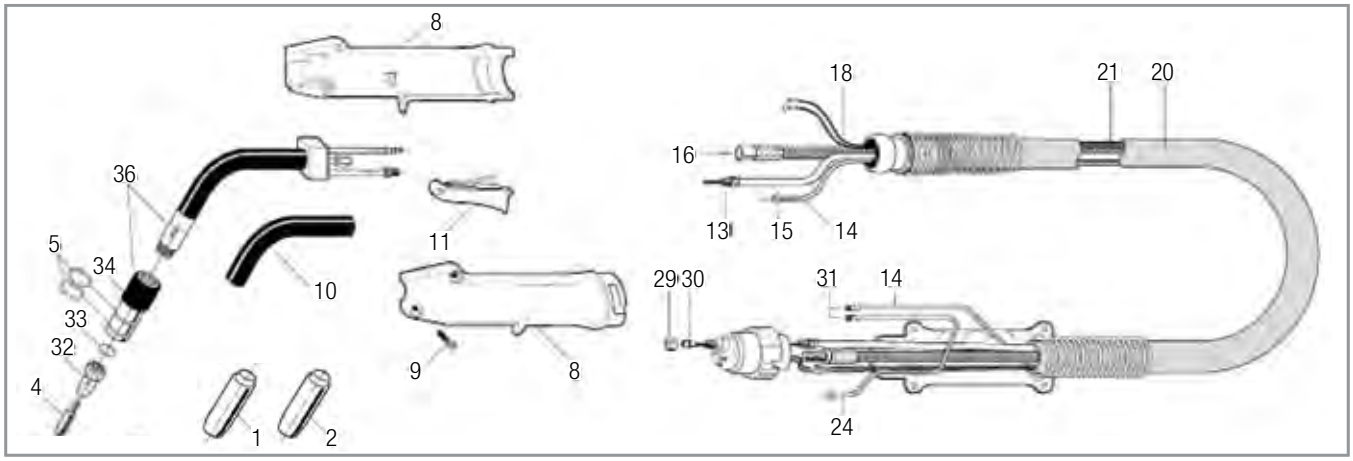

Spare Parts and Consumables

Code	Description	Position	Pack/Pcs
600939000L	Driving gas Nozzle ø i. 17	1	10
600943000L	Driving gas Tapared Nozzle ø i. 15	2	10
605750000L	Contact Tip ø 1,0Cu	4	25
605760000L	Contact Tip ø 1,2Cu	4	25
600884000L	Contact Tip ø 1,6Cu	4	25
600878000L	Contact Tip ø 1,0Cu-Cr	4	25
600881000L	Contact Tip ø 1,2Cu-Cr	4	25
600885000L	Contact Tip ø 1,6Cu-Cr	4	25
600755000L	O-Ring	5	20
6008190000	Handle	8	1
600947000L	Screws for Handle	9	50
6008260000	Heat Shrink	10	1
600874000L	Complete Buttom with Switch	11	5
6008660000	Liner support m.3	13	1
6008680000	Liner support m.4	13	1
6009010000	Water Hose (m)	14	-
600756000L	Water Hose Clamp ø 9,5	15	20
6007720000	Power Cable m.3	16	1
6007730000	Power Cable m.4	16	1
6007620000	Comand Cable (m)	18	-
6009060000	Canvas Cover (m)	20	-
6007960000	Interconnecting Cable m.3	21	1
6007980000	Interconnecting Cable m.4	21	1
6009070000	Water return Hose	24	-
600789000L	Liner nut locks	29	10
6008030000	Liner m.3 for wire ø 1,0/1,2	30	1
6008090000	Liner m.4 for wire ø 1,0/1,2	30	1
6008050000	Liner m.3 for wire ø 1,2/1,6	30	1
6008120000	Liner m.4 for wire ø 1,2/1,6	30	1
6008060000	Liner m.4 for wire Al. Ø 0,8/1,0 Carbon	30	1
6008070000	Liner m.4 for wire Al. Ø 1,2/1,6 Carbon	30	1
600888000L	Water hose Nipple	31	10
605800000L	Gas diffuser	32	5
605790000L	Insulating Washer	33	10
6008710000	Nozzle support	34	1
6007860000	Swan Neck	36	1

Tig Torch 17V/26V

Technical Data	TIG 17V	TIG 26V
V Class	L	L
I2 max (60% Argon)	150	250
I2 max (100% Argon)	115	200
V (Ac or Dc)	AC-DC	AC-DC
ø Electrode	1,0-2,4 mm	1,0-3,2 mm
Gas	6-12 l/1'	6-14 l/1'
Cooling	Air	Air

TIG Torch with Valve Air

Code	Description
6428300000	Tig Torch TTS 17V 4m Air Dinse 25 *
6428400000	Tig Torch TTS 17V 8m Air Dinse 25 *
6071400000	Tig Torch TTS 17V 4m Air Dinse 50 *
6009670000	Tig Torch TTS 17V 8m Air Dinse 50 *
642830000L	Tig Torch TTS 17V 4m Air Dinse 25 + CONSUMABLES
642840000L	Tig Torch TTS 17V 8m Air Dinse 25 + CONSUMABLES
607140000L	Tig Torch TTS 17V 4m Air Dinse 50 + CONSUMABLES
600967000L	Tig Torch TTS 17V 8m Air Dinse 50 + CONSUMABLES
6428500000	Tig Torch TTS 26V 4m Air Dinse 50 *
6009710000	Tig Torch TTS 26V 8m Air Dinse 50 *
642850000L	Tig Torch TTS 26V 4m Air Dinse 50 + CONSUMABLES
600971000L	Tig Torch TTS 26V 8m Air Dinse 50 + CONSUMABLES

* Without Consumables and Plug

Exploded View and Main Spare Parts

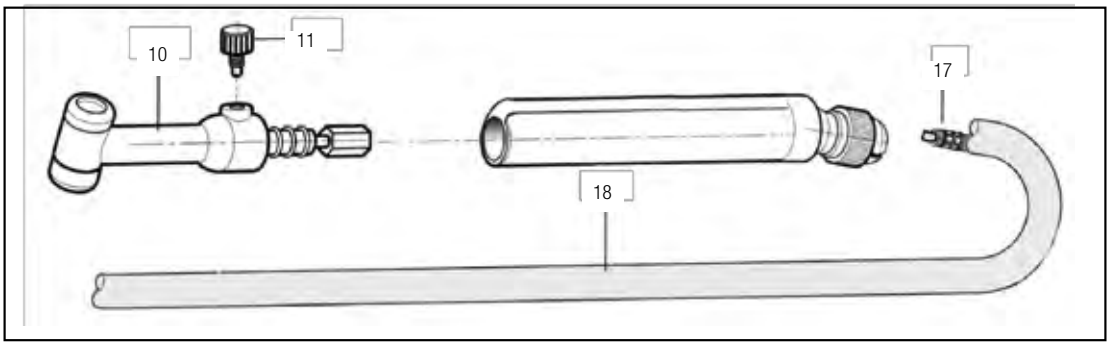

Spare Parts

Code	Description	Type	Position	Pack/Pcs
6007880000	Torch body with Valve	TIG 17V	10	1
6009440000	Valve with O Ring	TIG 17V	11	1
6007650000	Current Cable mt.4 M.12x1	TIG 17V	17	1
6007670000	Current Cable mt.8 M.12x1	TIG 17V	17	1
6008720000	Canvas protection "TUBIX" (m)	TIG 17V	18	1
6007870000	Torch body with Valve	TIG 26V	10	1
6009450000	Valve with O Ring	TIG 26V	11	1
6007660000	Current Cable mt.4 M.12x1	TIG 26V	17	1
6007680000	Current Cable mt.8 M.12x1	TIG 26V	17	1
6008730000	Canvas protection "TUBIX" (m)	TIG 26V	18	1

Tig Torch 17/26

Technical Data	TIG 17	TIG 26
V Class	L	L
I2 max (60% Argon)	190	250
I2 max (100% Argon)	150	200
V (Ac or Dc)	AC-DC	AC-DC
ø Electrode	1,0-2,4 mm	1,0-3,2 mm
Gas	6-12 l/1'	6-14 l/1'
Cooling	Air	Air

TIG Torch with Button Air

Code	Description
6007130000	Tig Torch TTS 17 4m Air *
6050300000	Tig Torch TTS 17 8m Air *
609910000L	Tig Torch TTS 17 4m Air + 7 Ways Plug
600972000L	Tig Torch TTS 17 8m Air + 7 Ways Plug
6060900000	Tig Torch TTS 17 4m Air + Euro Connector
6050500000	Tig Torch TTS 26 4m Air *
6050800000	Tig Torch TTS 26 8m Air *
609920000L	Tig Torch TTS 26 4m Air + 7 Ways Plug
600973000L	Tig Torch TTS 26 8m Air + 7 Ways Plug
600974000L	Tig Torch TTS 26 4m Air + 3 Ways Plug
600975000L	Tig Torch TTS 26 8m Air + 3 Ways Plug
600706000L	Tig Torch TTS 26 4m Air + 7 Ways Plug C016
600707000L	Tig Torch TTS 26 8m Air + 7 Ways Plug C016

* Without Consumables and Plug

Exploded View and Main Spare Parts

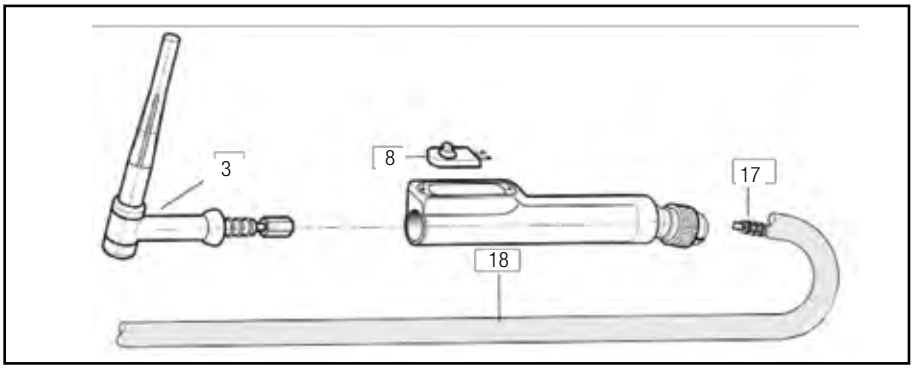

Spare Parts

Code	Description	Type	Position	Pack/Pcs
6007790000	Torch body	TIG 17	3	1
6039900000	Microswitch	TIG 17	8	1
6007650000	Current Cable mt.4 M.12x1	TIG 17	17	1
6007670000	Current Cable mt.8 M.12x1	TIG 17	17	1
6008720000	Canvas protection "TUBIX" (m)	TIG 17	18	1
6007810000	Torch body	TIG 26	3	1
6039900000	Microswitch	TIG 26	8	1
6007660000	Current Cable mt.4 M.12x1	TIG 26	17	1
6007680000	Current Cable mt.8 M.12x1	TIG 26	17	1
6008730000	Canvas protection "TUBIX" (m)	TIG 26	18	1

Tig Torch 18 350A H2O

Technical Data	TIG 18
V Class	L
I2 max (100% Argon)	350
V (Ac or Dc)	AC-DC
ø Electrode	1,0-4,0 mm
Gas	6-20 l/1'
Cooling	H2O
T°C (H2O)	30° C
Q Min (H2O)	1,5 (4m) -1,2 (8m)
P Min (H2O)	3 bar
P Max (H2O)	11 bar

TIG Torch with Button Air

Code	Description
6050600000	Tig Torch TTS 18 4m H20 *
6050700000	Tig Torch TTS 18 8m H20 *
605060000L	Tig Torch TTS 18 4m H20 + 3 Ways Plug
600976000L	Tig Torch TTS 18 8m H20 + 3 Ways Plug
601295000L	Tig Torch TTS 18 4m H20 + 2 Ways Plug
601296000L	Tig Torch TTS 18 8m H20 + 2 Ways Plug

* Without Consumables and Plug

Exploded View and Main Spare Parts

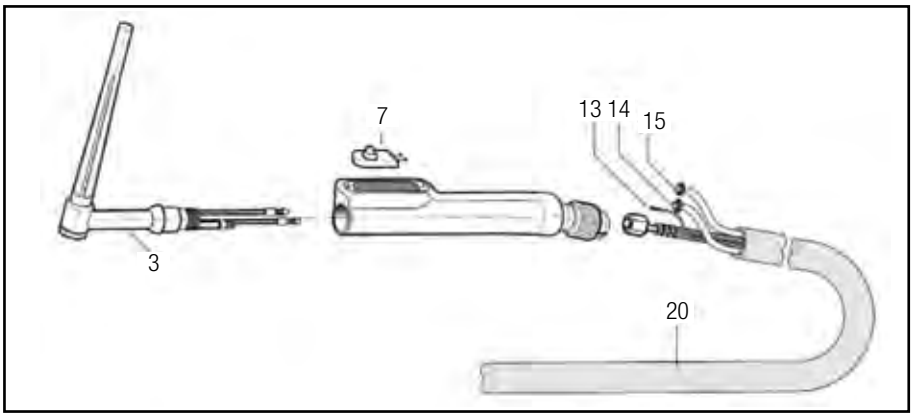

Spare Parts

Code	Description	Position	Pack/Pcs
6007780000	Torch body	3	1
6039900000	Microswitch	7	1
6007620000	Comand Cable (m)	13	1
6009050000	Gas Hose (m)	14	1
6009030000	Water Hose (m)	15	1
6008730000	Canvas protection "TUBIX" (m)	20	1

Tig Torch 20 250A H2O

Technical Data	TIG 20
V Class	L
I2 max (100% Argon)	250
V (Ac or Dc)	AC-DC
ø Electrode	1,0-3,2 mm
Gas	6-15 l/1'
Cooling	H2O
T°C (H2O)	30° C
Q Min (H2O)	1,6 (4m) -1,2 (8m)
P Min (H2O)	3 bar
P Max (H2O)	10 bar

TIG Torch with Button Air

Code	Description
6048500000	Tig Torch TTS 20 4m H20 *
6067400000	Tig Torch TTS 20 8m H20 *
600704000L	Tig Torch TTS 20 4m H20 + 3 Ways Plug
600705000L	Tig Torch TTS 20 8m H20 + 3 Ways Plug
600708000L	Tig Torch TTS 20 4m H20 + 7 Ways Plug C016
600709000L	Tig Torch TTS 20 8m H20 + 7 Ways Plug C016
601292000L	Tig Torch TTS 20 4m H20 + 2 Ways Plug
601293000L	Tig Torch TTS 20 8m H20 + 2 Ways Plug

* Without Consumables and Plug

Exploded View and Main Spare Parts

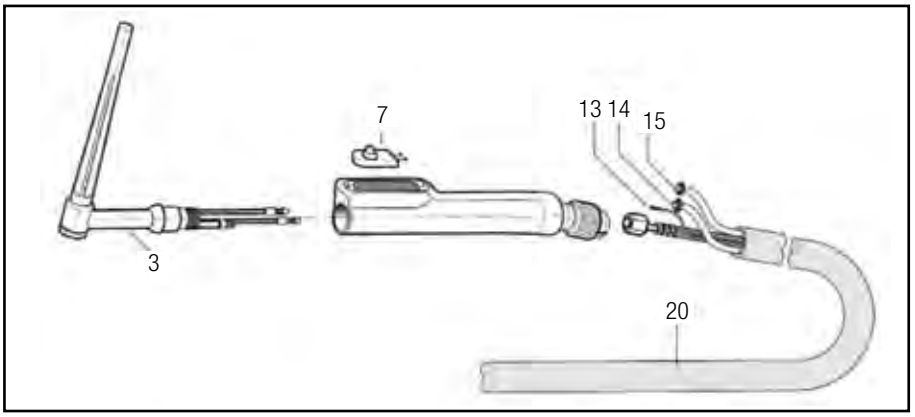

Spare Parts

Code	Description	Position	Pack/Pcs
6007770000	Torch body	3	1
6039900000	Microswitch	7	1
6007620000	Comand Cable (m)	13	1
6009040000	Gas Hose (m)	14	1
6009020000	Water Hose (m)	15	1
6008720000	Canvas protection "TUBIX" (m)	20	1

Consumables TIG
17V-26V-17-26-18

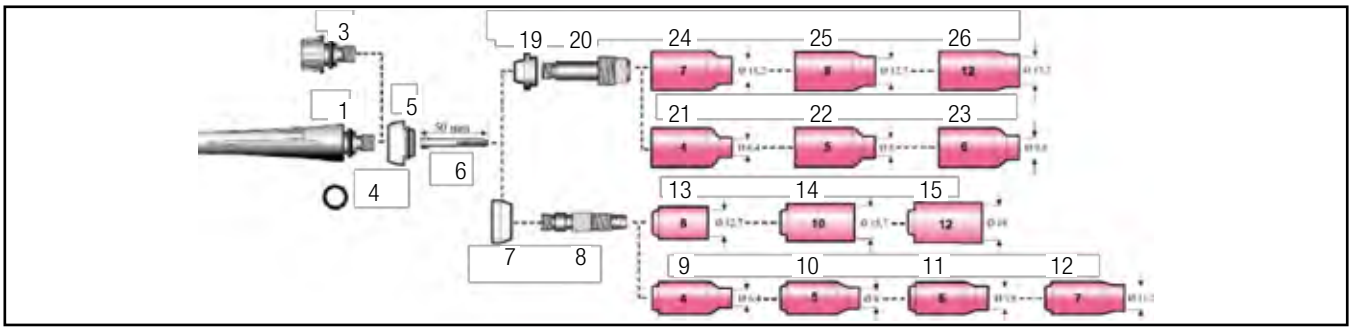

Consumables

Code	Description	Position	Pack/Pcs
600761000L	Back Cap Long 57Y02	1	5
600758000L	Back Cap Short 57Y04	3	5
600752000L	O Ring OR 2037	4	10
600814000L	Teflon Cup Gasket	5	5
600833000L	Collect Ø.1,0 10N22	6	10
600835000L	Collect Ø.1,6 10N23	6	10
600837000L	Collect Ø.2,0	6	10
600839000L	Collect Ø.2,4 10N24	6	10
600842000L	Collect Ø.3,2 10N25	6	10
600844000L	Collect Ø.4,0 54N20	6	10
600817000L	Teflon Insulator 18CG	7	5
600954000L	Collect body Ø.1,0 10N30	8	10
600955000L	Collect body Ø.1,6 10N31	8	10
600956000L	Collect body Ø.2,0	8	10
600957000L	Collect body Ø.2,4 10N32	8	10
600958000L	Collect body Ø.3,2 10N28	8	10
600959000L	Collect body Ø.4,0 406488	8	10
600911000L	Ceramic Nozzle GR.4 10N50	9	10
600912000L	Ceramic Nozzle GR.5 10N49	10	10
600913000L	Ceramic Nozzle GR.6 10N48	11	10
600914000L	Ceramic Nozzle GR.7 10N47	12	10
600915000L	Ceramic Nozzle GR.8 10N46	13	10
600908000L	Ceramic Nozzle GR.10 10N45	14	10
600909000L	Ceramic Nozzle GR.12 10N44	15	10
600815000L	Gas Lens Teflon Insulator	19	10
600845000L	Gas Lens Collect body Ø.1,0 45V24	20	10
600847000L	Gas Lens Collect body Ø.1,6 45V25	20	10
600849000L	Gas Lens Collect body Ø.2,4 45V26	20	10
600852000L	Gas Lens Collect body Ø.3,2 45V27	20	10
600854000L	Gas Lens Collect body Ø.4,0 45V28	20	10
600921000L	Ceramic Nozzle GR.4 54N18 Gas Lens	21	10
600924000L	Ceramic Nozzle GR.5 54N17 Gas Lens	22	10
600927000L	Ceramic Nozzle GR.6 54N16 Gas Lens	23	10
600931000L	Ceramic Nozzle GR.7 54N15 Gas Lens	24	10
600933000L	Ceramic Nozzle GR.8 54N14 Gas Lens	25	10
600917000L	Ceramic Nozzle GR.12 54N19 Gas Lens	26	10
600996000L	Ceriated Tungsten Electrode Ø 1,0 (Grey)	-	10
600997000L	Ceriated Tungsten Electrode Ø 1,6 (Grey)	-	10
600998000L	Ceriated Tungsten Electrode Ø 2,4 (Grey)	-	10
600999000L	Ceriated Tungsten Electrode Ø 3,2 (Grey)	-	10

Consumables TIG 20

TIG
(GTAW)

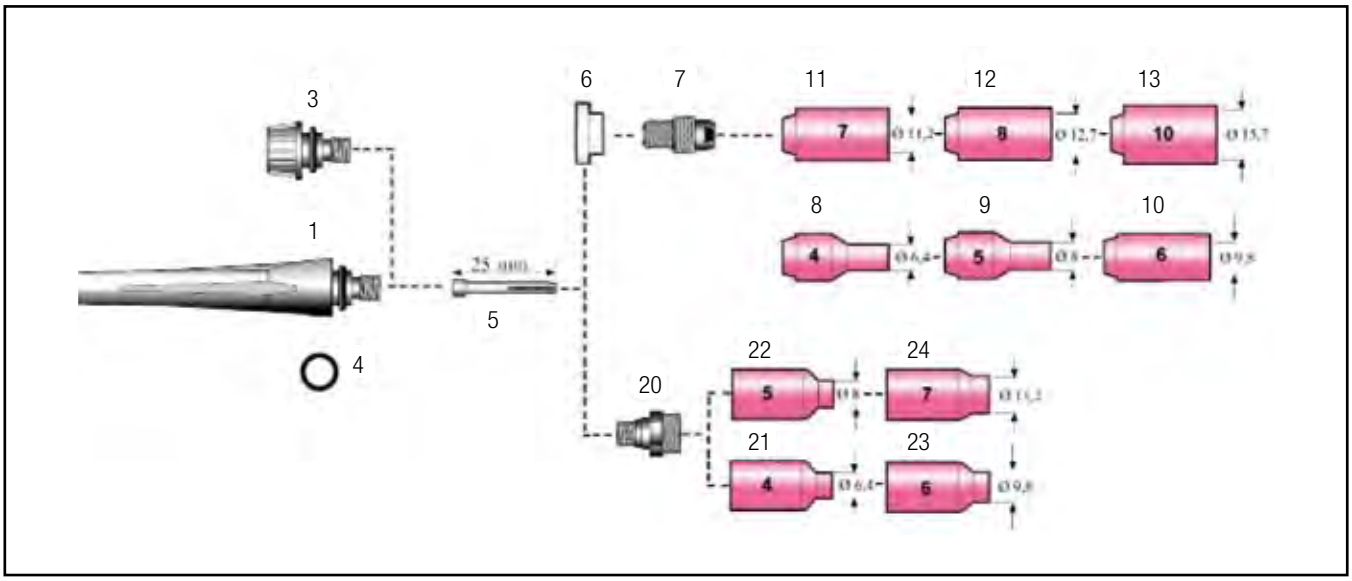

Consumables

Code	Description	Position	Pack/Pcs
600759000L	Back Cap Long 41V24	1	5
600757000L	Back Cap Short 41V33	3	5
600563000L	O Ring OR 2018	4	10
600834000L	Collect Ø.1,0 13N21	5	10
600836000L	Collect Ø.1,6 13N22	5	10
600838000L	Collect Ø.2,0	5	10
600564000L	Collect Ø.2,4 13N23	5	10
600575000L	Collect Ø.3,2 13N24	5	10
600813000L	Teflon Insulator 598882	6	5
600855000L	Collect body Ø 1,0 13N26	7	10
600856000L	Collect body Ø 1,6 13N27	7	10
600951000L	Collect body Ø 2,0	7	10
600566000L	Collect body Ø 2,4 13N28	7	10
600953000L	Collect body Ø 3,2 13N29	7	10
600576000L	Ceramic Nozzle GR.4 13N08	8	10
600567000L	Ceramic Nozzle GR.5 13N09	9	10
600925000L	Ceramic Nozzle GR.6 13N10	10	10
600928000L	Ceramic Nozzle GR.7 13N11	11	10
600932000L	Ceramic Nozzle GR.8 13N12	12	10
600846000L	Gas Lens Collect body Ø.1,0 45V42	20	10
600848000L	Gas Lens Collect body Ø.1,6 45V43	20	10
600851000L	Gas Lens Collect body Ø.2,4 45V44	20	10
600853000L	Gas Lens Collect body Ø.3,2 45V45	20	10
600919000L	Ceramic Nozzle GR.4 53N58 Gas Lens	21	10
600923000L	Ceramic Nozzle GR.5 53N59 Gas Lens	22	10
600926000L	Ceramic Nozzle GR.6 53N60 Gas Lens	23	10
600929000L	Ceramic Nozzle GR.7 53N61 Gas Lens	24	10
600996000L	Ceriated Tungsten Electrode Ø 1,0 (Grey)	-	10
600997000L	Ceriated Tungsten Electrode Ø 1,6 (Grey)	-	10
600998000L	Ceriated Tungsten Electrode Ø 2,4 (Grey)	-	10
600999000L	Ceriated Tungsten Electrode Ø 3,2 (Grey)	-	10

ULTRAVISION S2 HELMET

Unlimited VISION

Advantages

NEW

- **EN 175B Certification (Impact)**
- Light
- Garantee protection against welding arc
- Hands free working
- Perfect vision of the welding arc
- Better working on spot welding
- Maximum eyes protection

SENSITIVITY

The sensitivity set-up allows the operator to adjust the screen depending on the welding arc intensity:

+ Sensitivity: ideal for low amps welding.
- Sensitivity: ideal in presence of other light source.

DELAY

Some works need a faster or slower light delay:

+ Slower: ideal for MIG/MAG pulsed process
- Faster: ideal for Spot Welding or fast welding starts.

EN 175B : Specifies safety requirements and test methods for personal protective equipment used to protect the operator's eyes and face against harmful optical radiation and other specific risks or hazards in usual welding, cutting or similar operations.

Features

Ideal for professional Welders MIG/MAG, MMA ,TIG thanks to the 2 front sensors which allow a perfect arc welding sensing.Possibility to set the DELAY, SENSITIVITY) and DIN of protection (SHADE 9-13). Solar charge.

Features:

Variable Shade:	External Potentiometer da 9-13
Power On/Off:	Automatic
Sentivitiy Control:	From Low to High with Potentiometer on the visor
Power Supply:	Solar Cell
Switching Time:	0,3ms
Dark to Light Time:	With Potentiometer on the visor
Low Amperage TIG:	5 amps
Approved:	W2B 175B CE, ANSI Z78+, CAN/CSA Z94,3, AS/NZS 1337
Screen Dimension:	94x37mm
Class:	1/1/1/2

Welding Helmet

Code	Description
601348000L	Helmet ULTRAVISION S2

STEL CLOTHES

NEW

NEW

STEL Clothing

Code	Description
6013680000	Polo STEL
6013690000	Felpa STEL

Available in size S / M / XL / XXL (Please write on the order your size)

GENERAL SALES CONDITIONS

1.ORDER CONFIRMATIONS

Orders given to agents binding only Customer are subject to approval of head office who has the right to refuse them within 15 days from receipt. Orders are in any case considered subject to terms herein indicated even if order confirmation is missing.
Any particular purchase conditions departing from these general terms must be explicitly indicated on order and then approved by head office with order confirmation.

2. PARTIAL OR TOTAL CANCELLATION OF ORDER

Any order change or cancellation is valid only if agreed by both parties: the request must be notified within and no later than 3 (three) days from order's receipt.
However it is not possible to cancel an order concerning customised goods or expressly prepared in advance.

3. PRICE TERMS

For any increase of raw materials or labour costs, either officially authorised and due to causes depending on accidental local conditions head office has the right to review prices prior justified notice during processing of order.
Prices are quoted ex-works our factory, standard packing included (eventual personalised packing is not included).

4. PAYMENT

Payments must be effected only to head office of our company in Vicenza which is considered for all legal purposes the place of contract execution.
Customer will not have the right to modify one-sided payment conditions. In case of non-payment or delay our company will have the right to:
- request for immediate payment of all credits;
- deliver outstanding orders against advanced payment or suitable bank guaranty;
- withdraw from supply.

The lack of payment even if concerning one instalment or total invoice only authorises our company to back out of contract.
In case of delay payment the supplier will have the right to request for interests on arrears at the current Prime Rate applied by the main Italian Credit Institutes including collection expenses, bank rights and legal expenses.

5. DELIVERY (EXW)

Goods are delivered at buyer's risk and transport expenses are at his charge.
Carriage is ex-works our factory Via Del Progresso 59 36020 castegnero (VI) Italy (Incoterms 2000).The risck of lost or damage will be on buyer's charge even when the transport is organized by STEL and charged on the invoice. After 8 days from foreseen date of collection our company can arrange for delivery at any moment and without any prior notice debiting to buyer all relevant expenses.

6. OWNERSHIP OF GOODS

The ownership of goods supplied or at buyer's stock remains of STEL company until full payment of material delivered is made. In case of non-payment STEL has the right to request for the return of goods.
According to conditional sale invoice/s is/are considered unpaid after 20 (twenty) days from expiry date.

7. CLAIMS AND RETURNS OF GOODS

Claims must be effected on goods receipt and according to terms by law. Eventual damages caused by transport must be charged to forwarding agent and notified to supplier in copy within and no later than 8 (eight) days from delivery. Eventual damages do not give the right to stop payments.
Returns of goods are accepted only upon authorisation. Credit notes will be issued with a 20% depreciation of value to cover accounts, control and storage costs.
Goods returned must be of current production and new.

8. DELIVERY TIME

Delivery time is to be understood not peremptory therefore the buyer can not claim for damages or cancellation, even if partial, of contract in case of shipment delay.

9. SPARE PARTS AND SERVICE

The repair service and spare parts avaibility will be mantained till 7 years after product discontinuity.

10. CONDITIONS OF WARRANTY

36 MOUNTHS: From the date of D.D.T (Delivery Note) to the End User for Power Source with 3 Warranty Years Sticker.*
24 MOUNTHS: From the date of D.D.T (Delivery Note) to the End User for Power Source 1 Phase
12 MOUNTHS: From the date of D.D.T (Delivery Note) to the End User for Power Source 3 Phase
12 MOUNTHS: From the date of D.D.T (Delivery Note) to the End User for water cooler and Water Pump.

The warranty will be valid only if the Power Sources will come with the **invoice copy with serial number.**
* Warranty Terms for power source with 3 Warranty Years Sticker are attached inside the box of every products with 3 years of warranty.

In case the above is not going to happen STEL will have the right to adopt the following procedure:

26 MOUNTHS: From the date of internal testing (noticeable from the serial number) for 1 Phase Power Source.
18 MOUNTHS: From the date of internal testing (noticeable from the serial number) for 3 Phase Power Source.

11. WARRANTY NOT ALLOWED

Warranty doesn't cover the following items:
- Input cable due to wear and carelessness.
- Parts subject to normal wear (tips – nozzles – electrodes – tubes – diffusers – contact tips – liners)
- Tig torches – Mig torches – Plasma torches
- Earth Clamps and cables – Electrode Holders and cables – Welding Masks
- Single stage regulators

Warranty is not allowed under the following circumstances:
- Failures due to an uncorrect use or carelessness;
- Failures caused by transport;
- Wrong connection to power supply network;
- Power supply with different voltage then that indicated on the machine and on user manual;
- Repairs or breakage and convenient checks;
- Remove or breakage of lable or stamp proving production date.
- in case of lack of payment even if concerning one instalment or total invoice

Warranty never extends to the duty of compensation for any kind of damages eventually suffered by people or by things.
Going transport expenses are at buyer's charge.

12. SHIPPING MATERIAL ON WARRANTY

Always contact your dealer or authorized service center for a repair under warranty.

The shiping cost to STEL is at customer charge.
THe return shipping cost is at STEL charge (if warranty confirmed).

Where possible to replace the spare part under warranty at our authorized service center or dealer, the shipping costof parts will be at STEL charge.
It 's required the return of the faulty spare part at our office with shipping costat the customer charge.
If the piece will be tampered or there were serious reasons to make void the warranty, STEL will charged the full amount of the two shipping costs.

Cost of labor or intervention are not covered.

13. JURISDICTION

In case of dispute place of jurisdiction is Vicenza also departing from any other contrary agreement in conformity with art. 28 of the Italian Part No of Civil Procedure.

14. ENFORCEABLE LAW

The enforceable law is the italian with expless exclusion of Vienn Convention.

Web Contacts

Stelsale1

International Sales:

sales@stelgroup.it

General contact:

info@stelgroup.it

www.facebook.com/stelgroup

www.youtube.com/stelwelding

www.twitter.com/stelwelding

www.linkedin.com/company/stel-srl

© Stel s.r.l. 2017

Photos: shutterstock.com

I dati contenuti in questo catalogo sono stati controllati con la massima cura per assicurare la loro correttezza.
Tuttavia non si assume alcuna responsabilità per eventuali inesattezze o mancanze.

The technical information in this catalogue has been carefully checked in order to ensure accuracy.
However no liability can be assumed for any incorrect or incomplete data.

Die tecnischen in diesem Katalog sind mehrfach auf ihre Richtigkeit überprüft worden.
Dennoch wird keine Haftung für fehlerhafte oder unvollständige Daten übernommen.

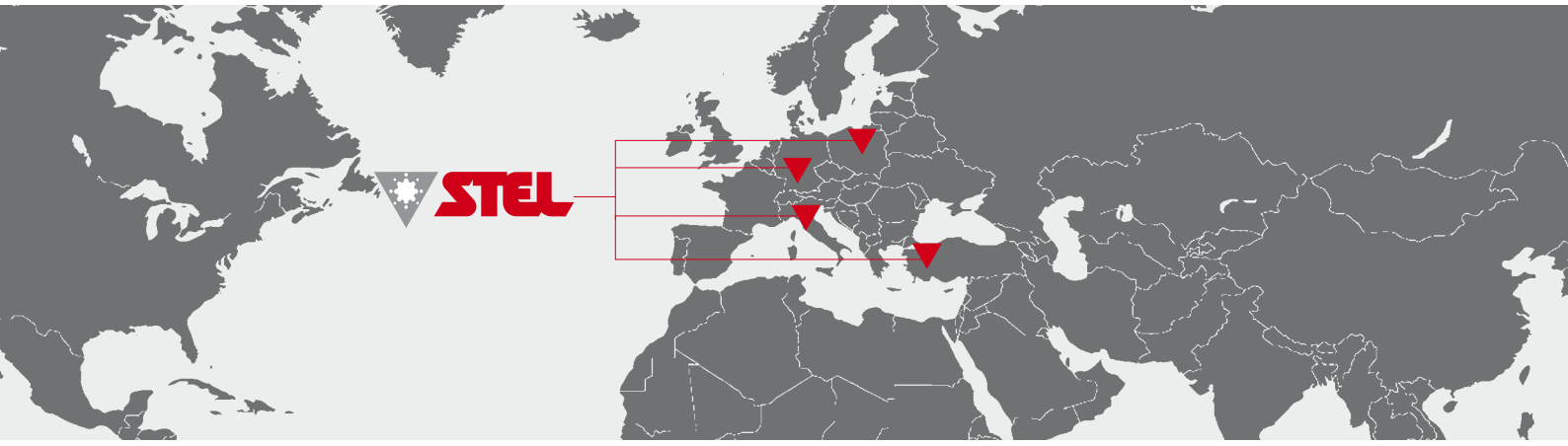

Stel S.r.l.
Via del Progresso, 59
36020 Castegnero (VI) - Italy
Tel. +39 0444 639525
Fax +39 0444 639641
info@stelgroup.it
www.stelgroup.it

Wrozas SP. Z.O.O.
Ul. Kaczencowa, 12
51180 Wroclaw - Poland
Tel. +48 7130 67131
Fax +48 7130 67132
wrozas@wrozas.pl
www.wrozas.pl

Stel Germany
Tel. +49 171 5747446
g.dornan@stelgroup.it

Stel Turkey
Tel. +90 532 4850584
sabrisen@gmail.com

cod. 69391000000

Stel S.r.l.
Via del Progresso, 59
36020 Castegnero (VI) - Italy
Tel. +39 0444 639525
Fax +39 0444 639641
info@stelgroup.it
www.stelgroup.it